READY TO RACE

1290 SUPER DUKE GT, orange 2023 2023

ART.-NR.: F9903WFEN

All information contained is without obligation. KTM Sportmotorcycle GmbH particularly reserves the right to modify any equipment, technical specifications, prices, colors, shapes, materials, services, service work, constructions, equipment and the like so as to adapt them to local conditions or to cancel any of the above items, all without previous announcement and without giving reasons. KTM may stop manufacturing certain models without previous notice. KTM shall not be held liable for any deviations of availability and/or ability to deliver, illustrations, descriptions, printing and/or other errors. The illustrated models partly contain extra equipment, which is not applied to standard models.

© by KTM Sportmotorcycle GmbH, Mattighofen AUSTRIA; All rights reserved; Reprint, also in extracts, with written allowance of KTM Sportmotorcycle GmbH, Mattighofen only.

FRONT FORK, TRIPLE CLAMP

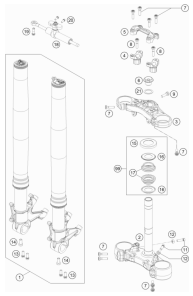

4

FRONT FORK DISASSEMBLED

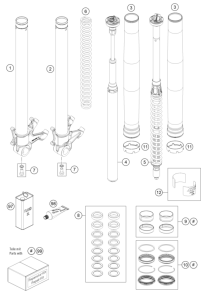

5

HANDLEBAR, CONTROLS

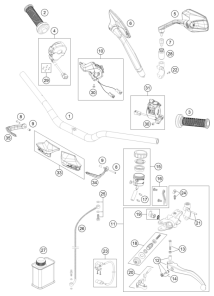

6

FRAME

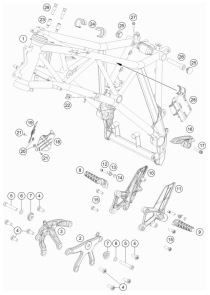

7

SUBFRAME

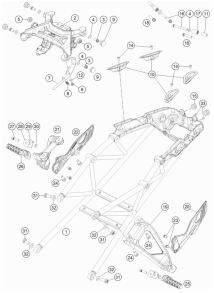

8

SIDE / CENTER STAND

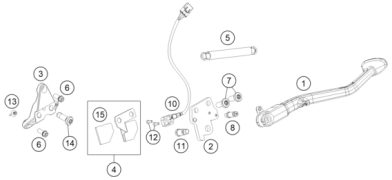

9

SHOCK ABSORBER

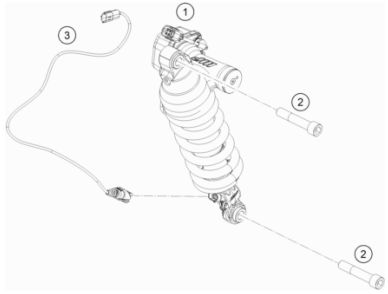

10

SHOCK ABSORBER DISASSEMBLED

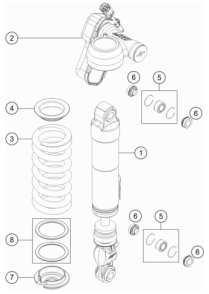

11

SWING ARM

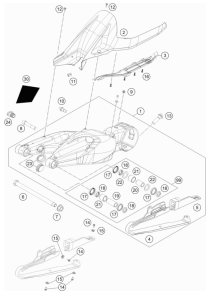

12

EXHAUST SYSTEM

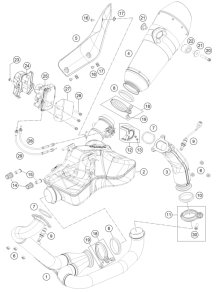

13

AIR FILTER

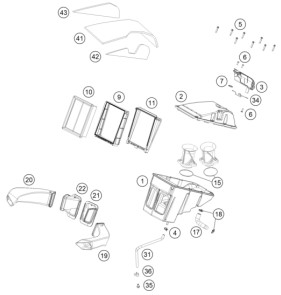

14

TANK, SEAT

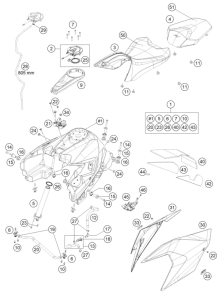

15

FUEL PUMP

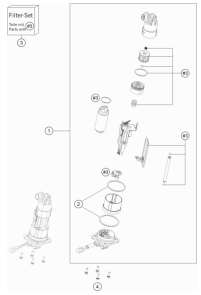

17

MASK, FENDERS

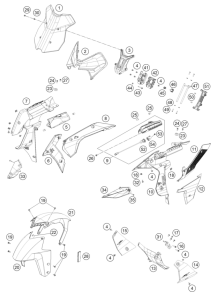

18

TRIM REAR

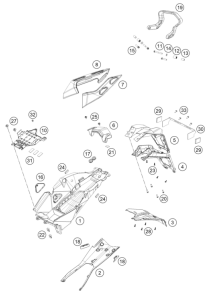

20

FRONT WHEEL

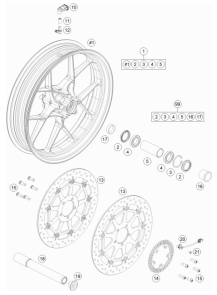

21

REAR WHEEL

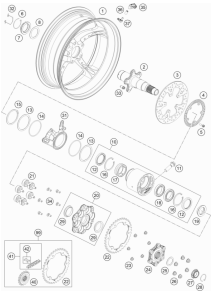

22

WIRING HARNESS

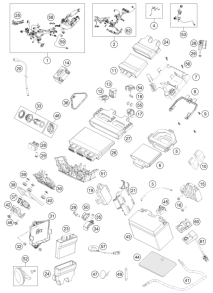

24

FRONT BRAKE CONTROL

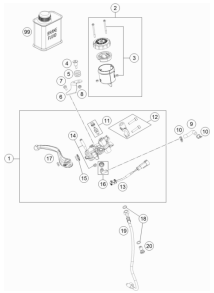

26

REAR BRAKE CONTROL

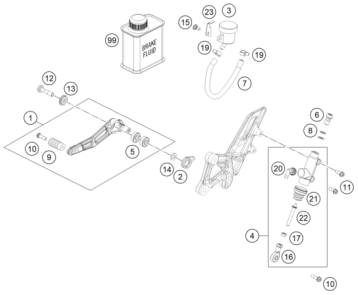

27

FRONT BRAKE CALIPER

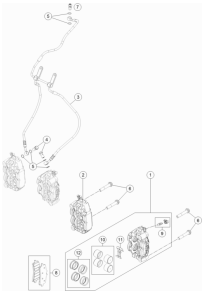

28

REAR BRAKE CALIPER

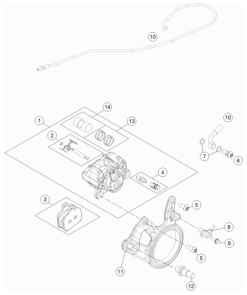

29

LIGHTING SYSTEM

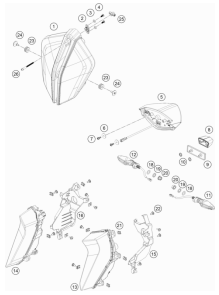

30

INSTRUMENTS / LOCK SYSTEM

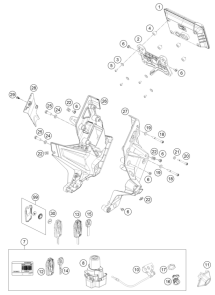

31

EVAPORATIVE CANISTER

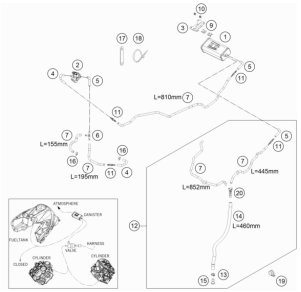

32

SEPERATE ENCLOSURE

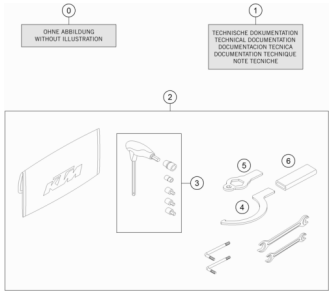

33

ANTIBLOCK SYSTEM ABS

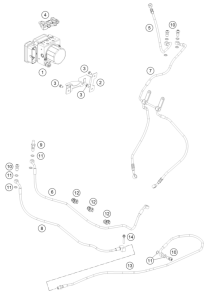

34

TECHNIC INFORMATION STICKER

35

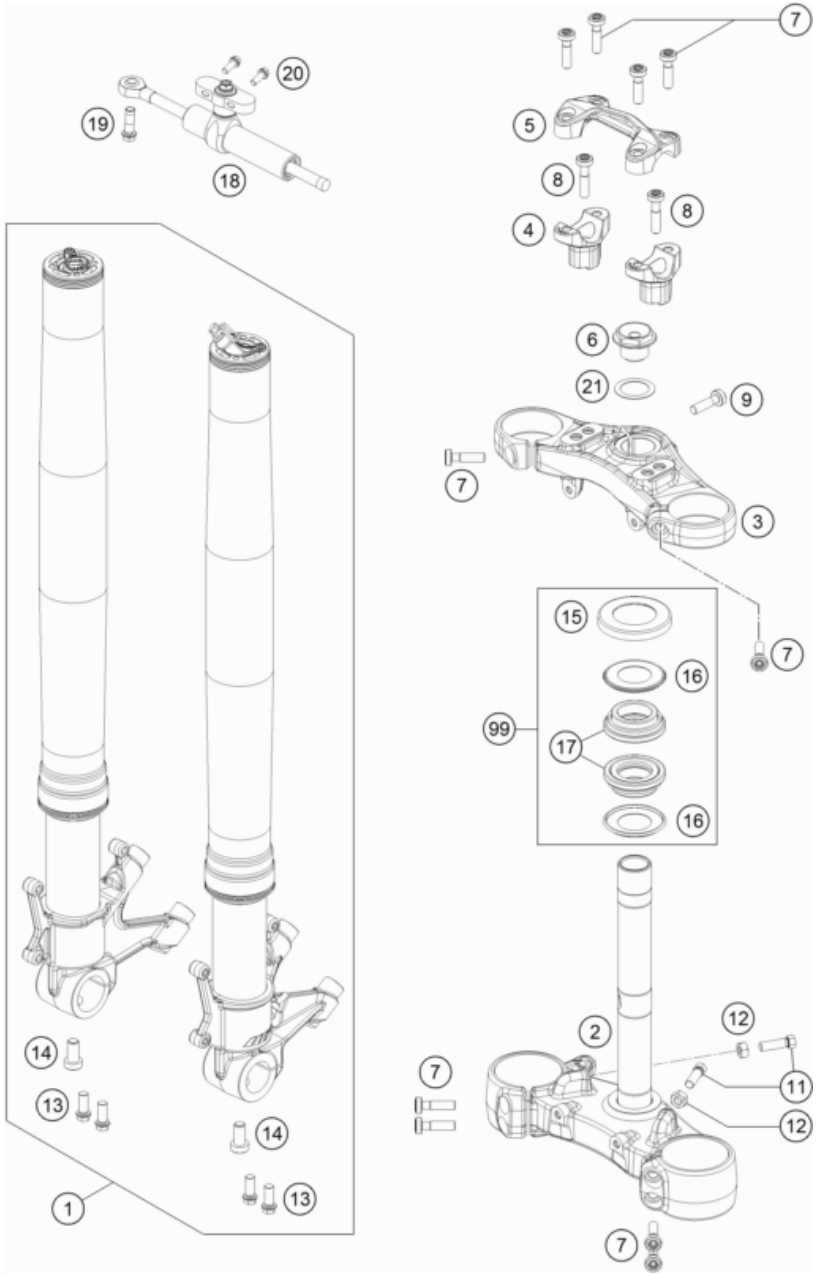

176140110

POS	PARTNUMBER		PIECE
1	14181Q2301	Fork Safe SD GT 1290 2017	1
2	6140103202933S	BOTTOM TRIPLE CLAMP CPL.	1
3	6140103402933S	UPPER TRIPLE CLAMP	1
4	6140103904233S	HANDLE BAR SUPPORT	2
5	6130103800033S	HANDLEBAR CLAMP	1
6	6900113600001	steering head screw	1
7	0035080306	SHCS M8x30 TX45	10
8	0032100356S	AH-COLLAR SCREW M10X35 ISA45	2
9	0035080306S	AH-COLLAR SCREW M8X30 ISA45	1
11	59001037000	SPECIAL SCREW M8X26 WS=10	2
12	0934080003	HEXAGON NUT DIN0934-M 8	2
13	0025080206	HH collar screw M8x20	4
14	00501020S1	AH SCREW M10X20 SET	2
15	69001086100	PROT. RING STEER. HEAD BEARING	1
16	69001084100	Stearing head gasket	2
17	69001081000	STEERINGHEAD BEARING CPL.	2
18	16181N52ES	STEERING DAMPER CPL. STROKE 75	1
19	0025080256S	HH COLLAR SCREW M8X25 TX40	1
20	0025060206S	HH collar screw M6x20 TX30	2
21	0988253505	thrust wash DIN0988-25x35x0,5	1
99	69001081044	STEARING HEAD REP. KIT RC8	1

58053

* NEW PART

X ON DEMAND

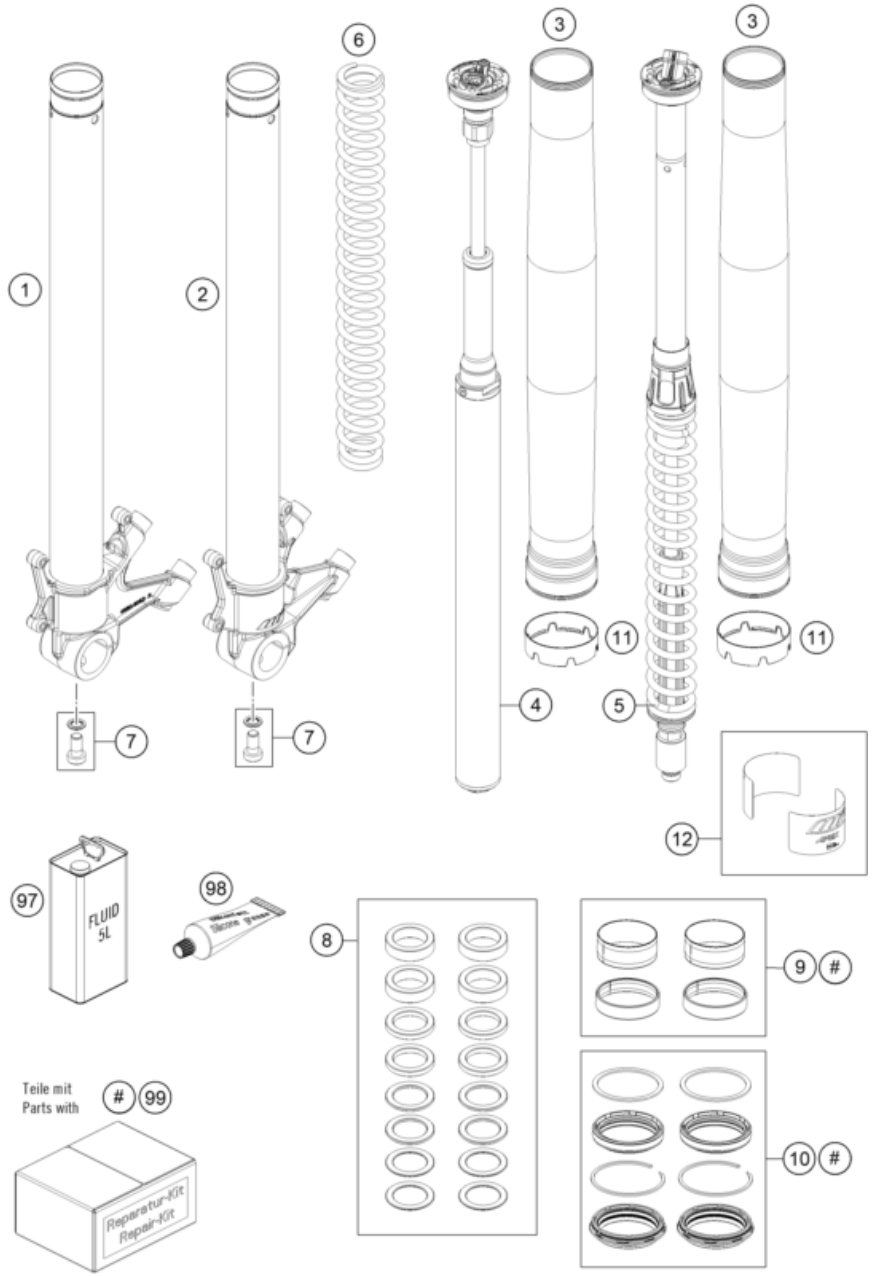

176140130

POS	PARTNUMBER		PIECE
1	48601082S2	AXLE CLAMP W. INNER TUBE R/S	1
2	48601081S2	AXLE CLAMP W. INNER TUBE L/S	1
3	48601099	Fork outer tube 49,13x550 dt54 db60	2
4	48SAF1Q23R	Cartridge cpl.	1
5	48SAF1Q23L	Cartridge cpl.	1
6	91410122	Mainspring (43,8) 200-325 fork	1
7	00501020S1	AH SCREW M10X20 SET	2
8	R14054	REP. KIT SPACER	1
9	R14047	Guide bushing set fork 48mm	1
10	R14040	GASKET KIT CPL.	1
11	S639200002000HG	Fork protection ring 62,1mm blue	2
12	52000212SET	sticker set APEX SAT 90x40	1
97	48601166S1	Fork Fluid Viscosity 4.0 5L	1
98	T14034	Fuchs grease IPR (250g)	1
99	R14063	Fork repair kit 48mm offroad	1

18853

* NEW PART

X ON DEMAND

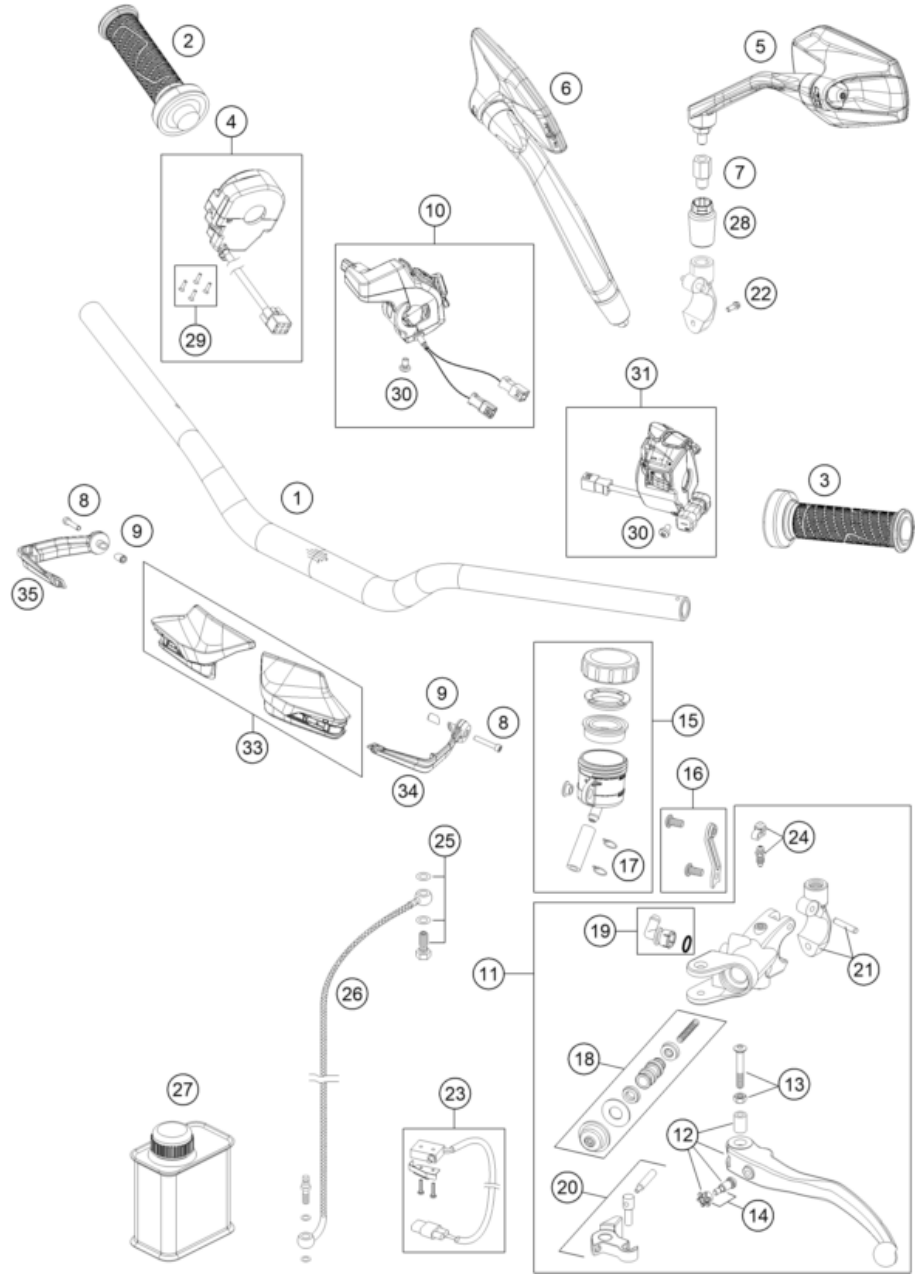

22A6120210

POS	PARTNUMBER		PIECE
1	A6120200100017	Handlebar Dk=28.5mm	1
2	60702112000	Handle gripheater R	1
3	60702139100	Handle Gripheater	1
4	60711912000	Quick turn throttle twist grip	1
5	61312040200	MIRROR LEFT CPL.	1
6	61312041200	MIRROR RIGHT CPL.	1
7	61312040050	ADAPTOR FOR MIRROR	2
8	0912080451	Screw w.hex.socket M8x45-8.8 black	2
9	62002080053	CLAMP INTERNAL	2
10	61711074100	Start / Emergency stop switch, right	1
11	6130203014430	MASTER CYLINDER CPL.	1
12	6130203100030	CLUTCH LEVER CPL.	1
13	50302038200	LEVER SCREW SHORT CPL. 09	1
14	61002043000	ADJUSTING SCREW CPL.	1
15	61002055144	RESERVOIR CPL.	1
16	61302055050	RETAINING PLATE RESERVOIR	1
17	58007117000	YDNAC-CLAMP 10107 10MM	2
18	59413008000	REP. SET PISTON D=12MM 2007	1
19	61002051144	ANGLE PIECE CPL. (DOT)	1
20	61002056000	ROCKER CPL. 05	1
21	6130204400030	CLAMP MIRROR W. TENSION PIN	1
22	0025060126	HH collar screw M6x12 TX30	1
23	83111049000	CLUTCH SWITCH ATV	1
24	61002054000	BLEEDER SCREW WITH CAP	1
25	59032062000	HOLLOW SCREW + COPPER GASKET	1
26	61032063100	CLUTCH PIPE	1
27	00062030000	BRAKE FLUID DOT5.1 0,25L	1
28	61312040030	RUBBER SLEEVE	2
29	76011073110	SCREW SET START-STOP SWITCH	1
30	073800501002	PAN HEAD SCREW M5X10 TX25	2
31	61711070100	Combination steering switch, left side	1
33	61502079000CB	Hand guard kit	1
34	61502082000C1	Handguard bracket left	1
35	61502083000C1	Handguard bracket right	1

58050

* NEW PART

X ON DEMAND

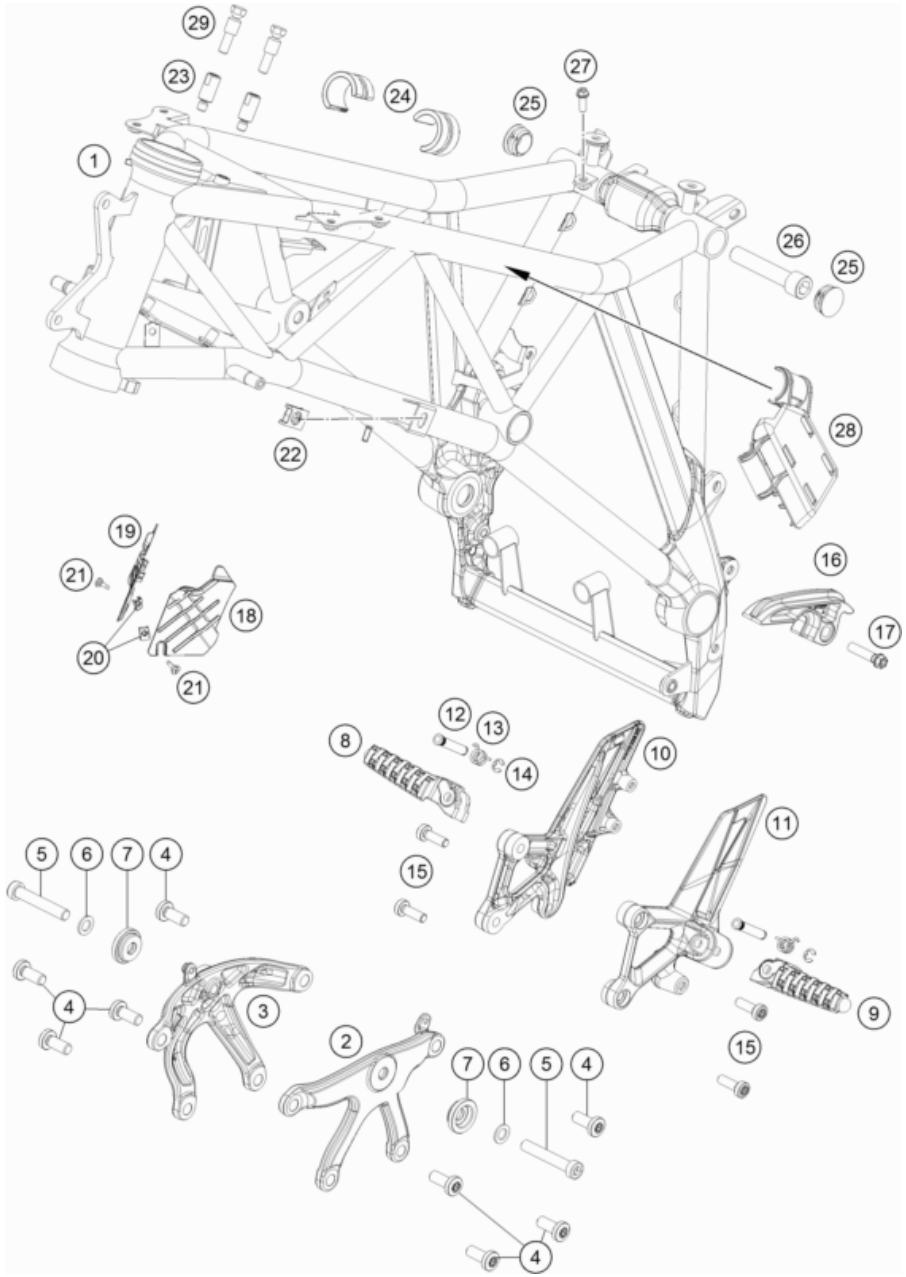

196140310

POS	PARTNUMBER		PIECE
1	61503001100EB	Frame 615	1
2	6030300500033S	ENGINE SUPPORTL/S BLACK	1
3	6030300600033S	ENGINE SUPPORT R/S BLACK	1
4	0035100249	SHCS M10x24 TX45	8
5	0035100609S	AH-COLLAR SCREW M10X60 ISA45	2
6	0433100003	WASHER 18x10,5x1,6	2
7	60303010000	BUSHING MOTOR MOUNTING	2
8	6900314100033S	FOOTREST FRONT R/S 13	1
9	6900314000033S	FOOTREST FRONT L/S 13	1
10	6130303910033S	FOOTREST SUPPORT FRONT R/S BL.	1
11	6130313800033S	FOOTREST PLATE FR. L/S	1
12	60003044100	footrest bolt, rear	2
13	61003042000	SPRING FOOTREST FRONT 05	2
14	0799060003	retaining washer DIN 6799 - 6	2
15	0035080256S	ISA collar screw M8x25 ISA45	4
16	61304076000	CHAIN SLIDING BLOCK-FRAME	1
17	0025080356	HH collar screw M8x35 TX40	1
18	61503085000	Frame cover left	1
19	61403086000	FRAME COVER RIGHT	1
20	69008021080	clip nut M5	2
21	69008021060	special screw M5x17	2
22	54603048000	RANGE CHANGE METAL NUT M8	1
23	61503001013	Connecting piece keyless ignition lock	2
24	61007014000	SPACER FUEL TANK 05	2
25	61003088000	PLUG SFL28 05	2
26	60004017000	SCREW M14X1,5 L=73MM 03	1
27	0025060126	HH collar screw M6x12 TX30	1
28	61412032040	TPMS holder	1
29	61611064000	Tamper-proof screw	2

58038

* NEW PART

X ON DEMAND

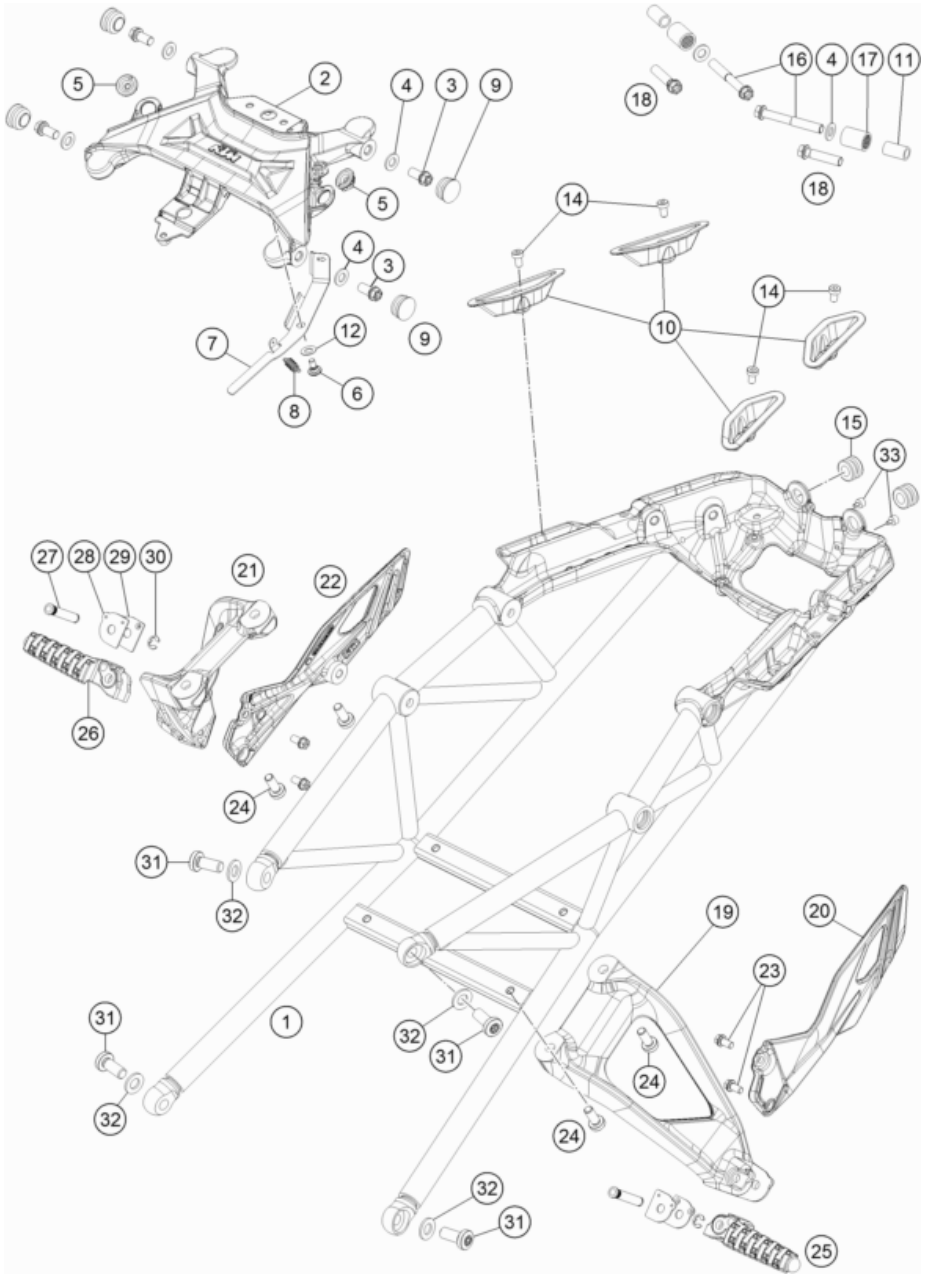

166140320

POS	PARTNUMBER		PIECE
1	61503002000C1	Subframe	1
2	6140300213091	Cross stiffener back	1
3	0025080186S	HH collar screw M8x18 ISA40 SS	4
4	0125080003	washer DIN 125 A -8.4	6
5	47106003160	quick release rubber grommet	2
6	69013099050	SCREW F. EXPANSION TANK	1
7	61407050050	SEAT LOCK PLATE	1
8	69008025080	SPRING F. REAR SEAT LOCK	1
9	61303088000	PLUG SFL 22X0,8-3,0	4
10	61503002055	SHELL KIT SIDECASE	1
11	61407049000	BUSHING 8.4X12X21.5	2
12	61403002032	Wave spring	1
14	0984060103	AH SCREW DIN7984-M 6X10	4
15	61013013000	RUBBER BUSH 05	2
16	0025080606	HH COLLAR SCREW M8x60 TX40	2
17	60307048000	RUBBER SEAT-CONTACT SURFACE	2
18	0025080356	HH collar screw M8x35 TX40	2
19	6140304800033S	LEFT PILLION STEP HOLDER	1
20	6140304805033S	LEFT PILLION HEEL GUARD	1
21	6140304900033S	RIGHT PILLION STEP HOLDER	1
22	6140304905033S	RIGHT PILLION HEEL GUARD	1
23	0025060126	HH collar screw M6x12 TX30	4
24	0035080206S	SHCS M8x20 TX45	4
25	6900305003333S	FOOTREST REAR L/S CPL.	1
26	6900305103333S	FOOTREST REAR R/S CPL.	1
27	60003044100	footrest bolt, rear	2
28	60003052000	ENGAGE PANEL FOOTREST R/S 03	2
29	60003152000	ENGAGE PANEL FOOTREST L/S 03	2
30	0799060003	retaining washer DIN 6799 - 6	2
31	0035100249	SHCS M10x24 TX45	4
32	0125100003	washer DIN 125 A 10.5	4
33	61414040010	RUBBER MOUNTING	2

58062

* NEW PART

X ON DEMAND

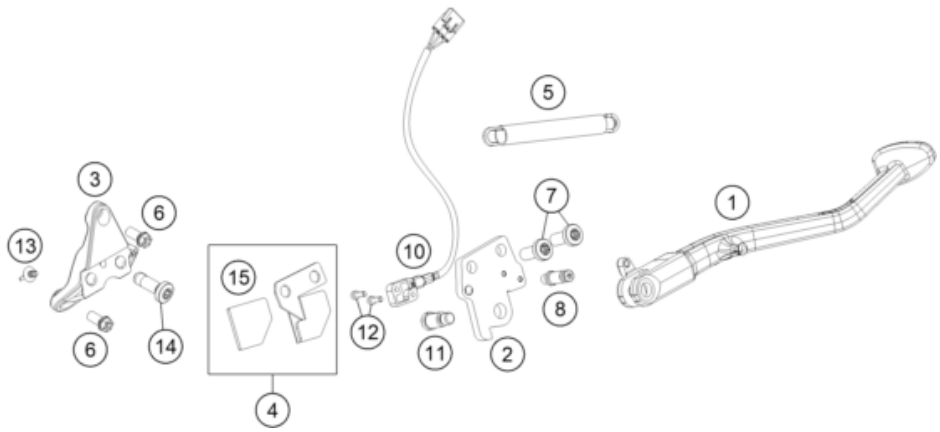

22A6120360

POS	PARTNUMBER		PIECE
1	A61203023033C1	Side stand with magnet	1
2	A61203028000	Side stand bracket	1
3	6130302600033S	SIDE STAND BRACKET	1
4	A61203027033	Deflector plate, preass.	1
5	60303024100	SIDE STAND SPRING	1
6	0025080166S	HH collar screw M8x16 TX40 SL	2
7	0035100249S	HH collar screw M10x24 ISA45 S	2
8	61303028001	SPEC. SCREW SIDE STAND SPRING	1
10	61011045000	SIDE STAND SENSOR 05	1
11	62503027200	SCREW FOR SIDE STAND M10X31,2	1
12	0084040123	CYL.HEAD SCREW DIN84A M4x12	2
13	61011094000	CABLE TIE WITH PLUG M6	1
14	0035100309S	SHCS M10x30 TX45	1
15	A61203027010	Thermal protection foil	1

58055

* NEW PART

X ON DEMAND

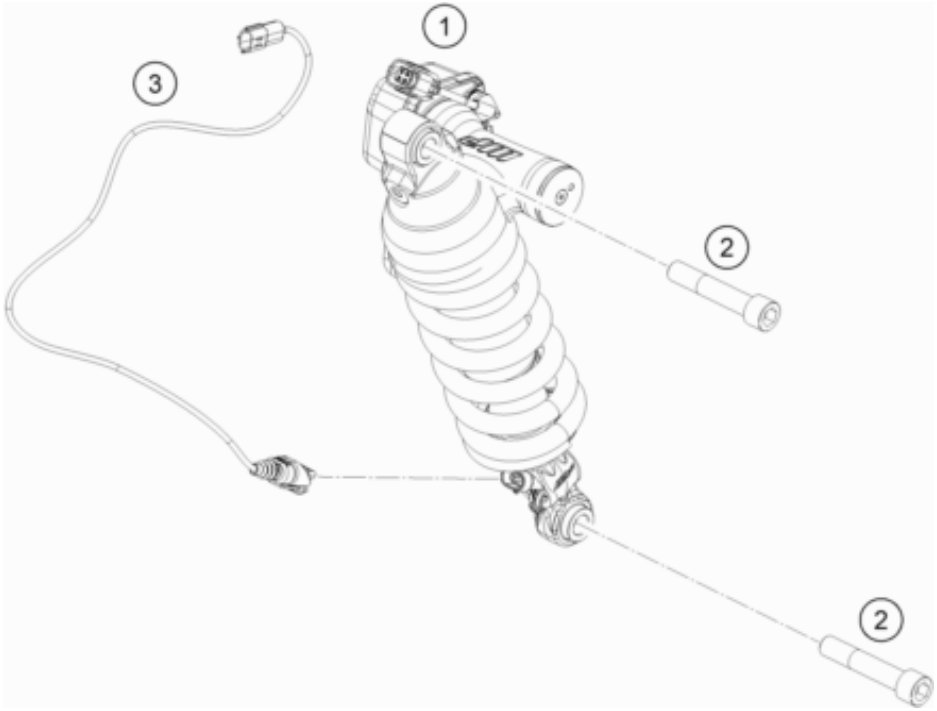

166140410

POS	PARTNUMBER		PIECE
1	01181Q2301	Monoshock Safe SD GT 2017 WP	1
2	60004017000	SCREW M14X1,5 L=73MM 03	2
3	61411015000	HARNESS MONOSHOCK SAFE	1

18856

* NEW PART

X ON DEMAND

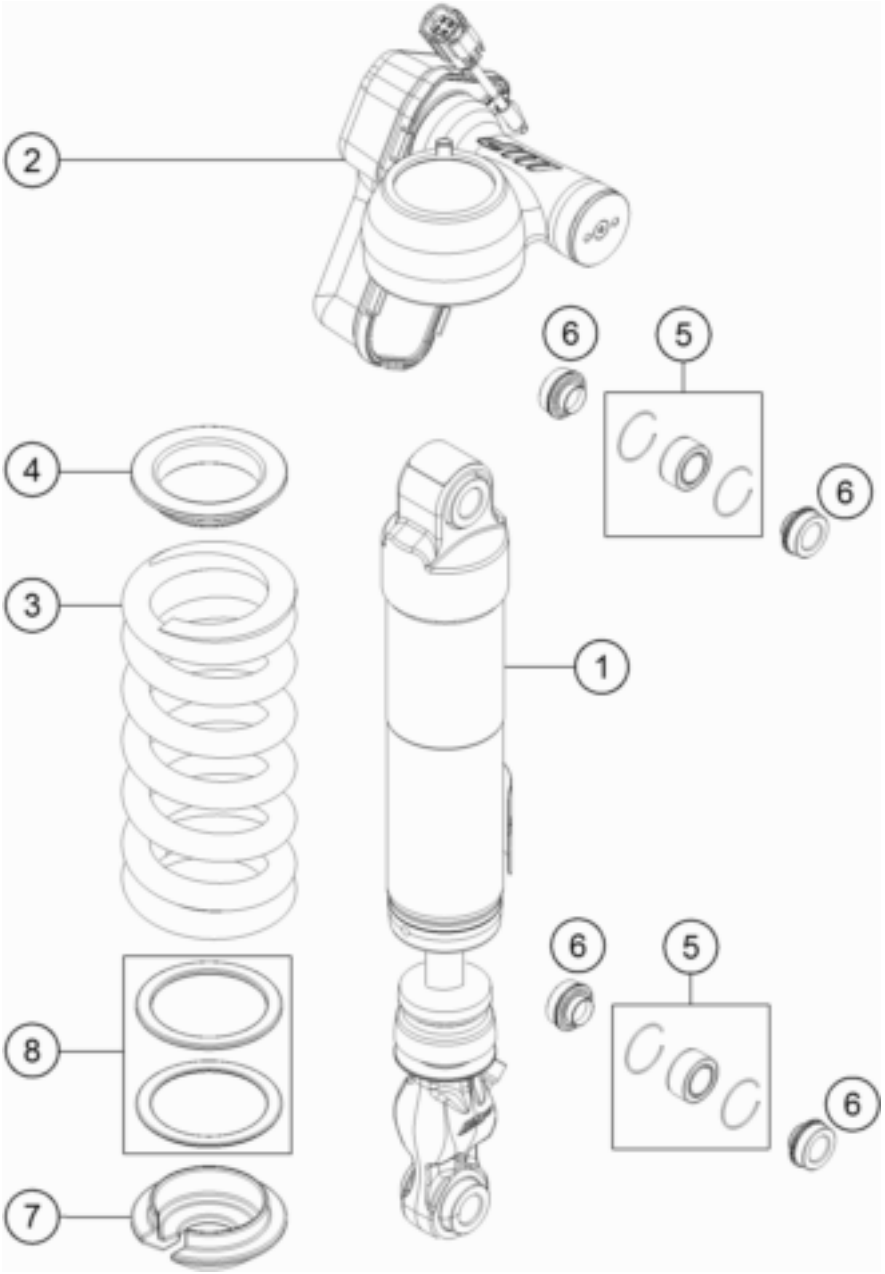

166140430

POS	PARTNUMBER		PIECE
1	46812014s2	Monoshock assembly group	1
2	11000P05	PA cpl. KTM EDS d46 s10	1
3	91010347	Mainspring (59) 185-185 damper	1
4	14460661	Spring retainer 52,5x78x3	1
5	R12012	Ball joint bearing kit top 12mm	2
6	46181307E	Bearing bush 14x15/23,5x14,45 cpl.	4
7	46181299	Spring retainer 28x73x15 black	1
8	RP10009	WASHER SET D73	1

18857

* NEW PART

X ON DEMAND

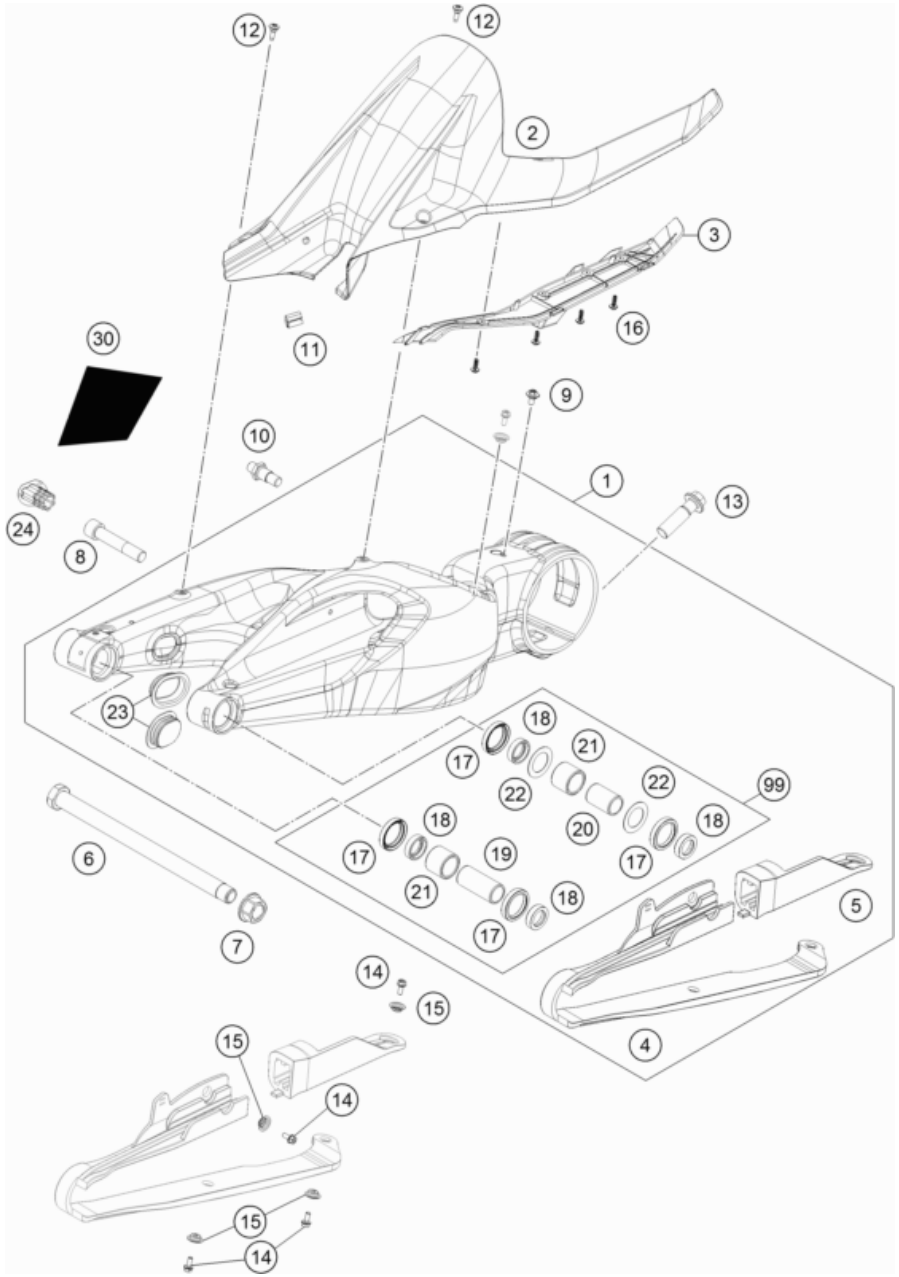

186140490

POS	PARTNUMBER		PIECE
1	6140403014433A	Swingarm cmpl. SD-GT	1
2	61304050100	REARFENDER	1
3	61304051000	BRACKET SPLASH PROTECTOR	1
4	61304060000	CHAIN SLIDING GUARD FRONT	1
5	61304070000	CHAIN SLIDING GUARD REAR	1
6	69004037344	Swingarm pivot	1
7	60004038200	COLLAR NUT M19X1,5 SW=27MM	1
8	60004017000	SCREW M14X1,5 L=73MM 03	1
9	83008000012	special screw M6x12x3	1
10	76004142000	BOLT BRAKE SADDLE BRACKET	1
11	61304042000	CABLE SUPPORT	1
12	69008021060	special screw M5x17	2
13	61310021000	HH COLLAR SCREW M16X1,5X55	1
14	0025050126	HH collar screw M5x12 TX30	4
15	46104066050	BUSH FOR CHAINSLIDER GUARD 02	4
16	0081050141	EJOT PT screw K50x14	4
17	0760304073	SHAFT SEAL RING 30X40X7	4
18	60004034000	BUCKET F. SHAFT SEAL RING 03	4
19	69004032000	INNER RING JR 20X25X56,5	1
20	60004032000	INNER RING JR20X25X38,5 03	1
21	60004031000	NEEDLE BUSH HK2526B 03	2
22	60004033000	STOP DISK 03	2
23	61304041100	CLOSING COVER SWINGARM	2
24	61604041040	Plug	1
30	61604030010	Swing protective foil sw.	1
99	69004230010	swingarm rep. kit	1

53675

* NEW PART

X ON DEMAND

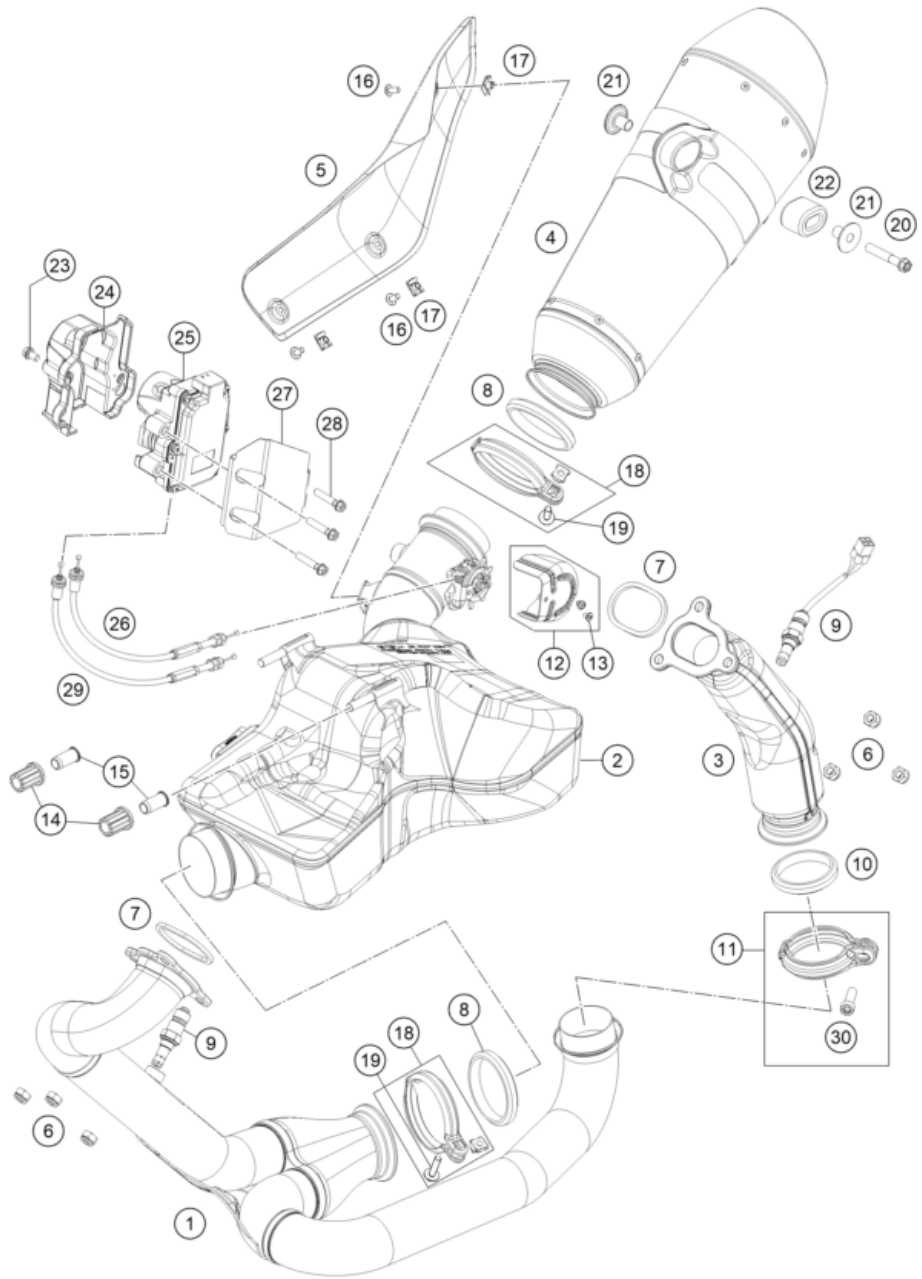

22A6120510

POS	PARTNUMBER		PIECE
1	A61205007000	Manifold front	1
2	A61205050000	Presilencer	1
3	60405008200	Header with integral insulation	1
4	61305083000	SILENCER CPL.	1
5	6140501100033	HEAT PROTECTOR BLACK	1
6	51010086100	self-locking nut M8 Cu	6
7	69005005100	EXHAUST PIPE FLANGE GASKET	2
8	61305105005	Manifold gasket 60mm	2
9	75041090200	LAMBDA SENSOR	2
10	69005005005	MANIFOLD GASKET	1
11	63605058100	Exhaust clamp tube 50 mm	1
12	61405095150	Exhaust flap cover	1
13	60402052010	EJOT SPIRAL SCREW SF M4X6-K	2
14	61005013000	RUBBER SILENCER SUPPORT 05	2
15	61005014000	SLEEVE SILENCER SUPPORT 05	2
16	78105081010	SCREW TORX M5X10	3
17	69008021080	clip nut M5	3
18	61305058100	Clamp, tube, 60 mm	2
19	0024060256	HH COLLAR SCREW M6X25 TX30	2
20	0025080456S	HH COLLAR SCREW M8X45 ISA40	1
21	61305069000	BUSHING 8,5X11X29	2
22	61305068000	DAMPING RUBBER	1
23	0025060106	HH collar screw M6x10 TX30	1
24	61441070050	COVER EXHAUST FLAP CONTROL MOT	1
25	61441070100	Exhaust flap controll motor	1
26	61441171000	Throttle cable AG, flap 1	1
27	61441070060	HEAT PROTECTION CAP SERVOMOTOR	1
28	0025060306	HH collar screw M6x30 TX30	3
29	61441271000	Throttle cable AG, flap 2	1
30	0145800802500	Cap head bolt ISO 14580 M8x25 Ni/PTFE	1

58041

* NEW PART

X ON DEMAND

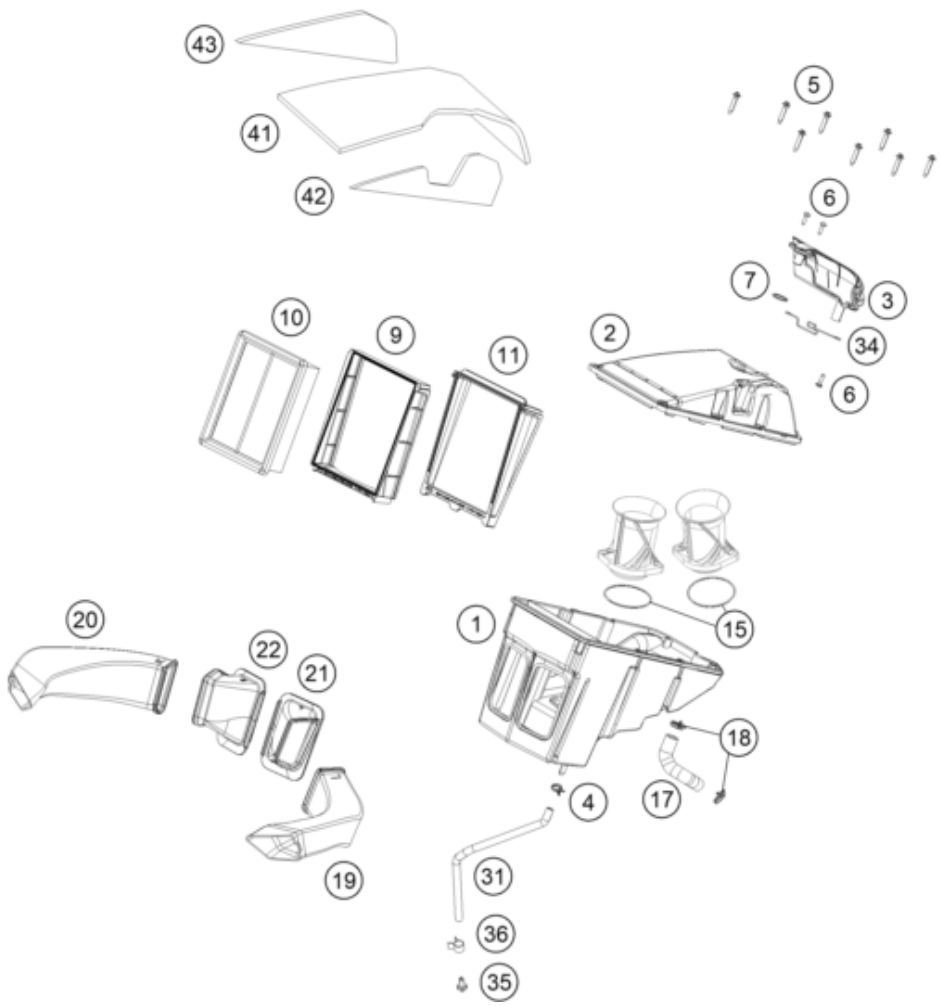

206140610

POS	PARTNUMBER		PIECE
1	60306001200	AIR FILTER HOUSING LOWER PART	1
2	60306002000	AIR FILTER BOX COVER	1
3	60330088100	OIL SEPARATOR	1
4	58031005000	CLAMP YDNAC 10128 12MM	1
5	0017060305	SPECIAL SCREW K60X30 WS=6	8
6	0081050161	EJOT PT SCREW K50X16 1451	2
7	0770021020	O-RING 21,00X2,00 NBR70	1
9	60406016000	FILTERCLAMPING FRAME	x
10	60706015000	Air filter	1
11	60406017000	FILTERCLAMPING LINER	1
15	0770066025	O-RING 66X2,5 FKM	2
17	60330088030	OIL SEPARATOR FOAM HOSE	1
18	58431082100	YDNAC-CLAMP 10173 (16MM) '98	2
19	61506041000	Intake duct, left	1
20	61506040000	Intake duct, right	1
21	61406040050	GASKET INTAKE CHANNEL	1
22	61406041050	GASKET INTAKE CHANNEL	1
31	60015019001	HOSE NBR 7X11 PER METER	1
34	61311099000	MOUNTING BRACKET PLUG	1
35	90515011000	PLUG FUEL DRAIN	1
36	58007117000	YDNAC-CLAMP 10107 10MM	1
41	61306095010	INSULATION MAT MIDDLE	1
42	61306095020	INSULATION MAT L/S	1
43	61306095030	INSULATION MAT R/S	1

57353

* NEW PART

X ON DEMAND

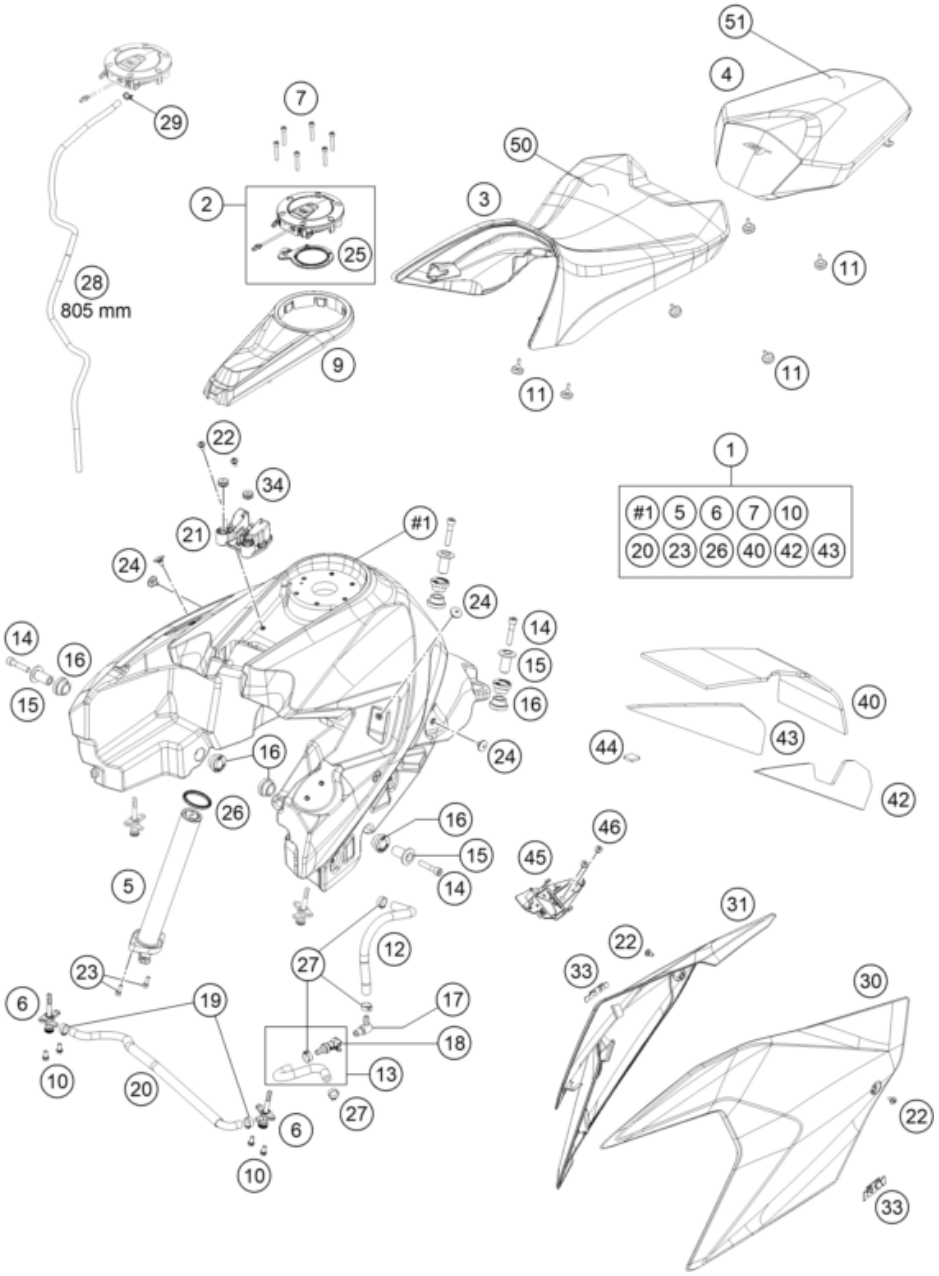

22A6120710

POS	PARTNUMBER		PIECE
1	61407013344BKA	fuel tank SD-GT orange 22	1
2	61507008100	Fuel tank cap, RaceOn	1
3	61507040000	Driver seat complete	1
4	61507047000	Passenger seat	1
5	61407080200	Fuel lever sensor	1
6	58507003200	FUEL COCK CPL.	2
7	0912050253	AH SCREW DIN0912-M 5X25	6
9	61507058000	Tank cover	1
10	0025060126	HH collar screw M6x12 TX30	4
11	60006001021	DISTANCE RUBBER AIRBOX 03	6
12	61407016050	FUEL HOSE DKK	1
13	62607016044	FUEL HOSE CPL.	1
14	0912080403	SHCS DIN 912 M8x40	4
15	61007060000	collar bushing, bearing, outside	4
16	61007065000	collar bushing, front tank holder	8
17	7720701000030	PLUG CPC	1
18	5850701050030	CLUTCH CPC BLACK 05	1
19	58031005000	CLAMP YDNAC 10128 12MM	2
20	61407018000	TANK COMPENSATION TUBE	1
21	61507058050	RRS antenna support	1
22	69008021160	special screw M5x12	2
23	0912050163	AH SCREW DIN0912-M 5X16	2
24	58407011100	SCREW FOR SEAT M6X11,5/8	4
25	60307008190	GASKET TANK CAP	1
26	60307080090	GASKET FUEL LEVEL SENSOR	1
27	00050157706	VARIABLE ONE-EAR CLAMP 15,7MM	5
28	60007126001	HOSE 5,4X9,4 NBR, METER	1
29	58007117000	YDNAC-CLAMP 10107 10MM	1
30	61508050000EBA	Radiator shroud left with decal	1
31	61508051000EBA	Radiator shroud right with decal	1
33	61608098000	Decal 3D "KTM" 17	2
34	76008052050	RUBBER SLEEVE 5X7.6X13MM	2
40	61306095010	INSULATION MAT MIDDLE	1
42	61306095020	INSULATION MAT L/S	1
43	61306095030	INSULATION MAT R/S	1
44	61408015030	METAMOLL F. TAIL LIGHT COVER	2
45	A61214086010	Control unit bracket	1

58064

* NEW PART

X ON DEMAND

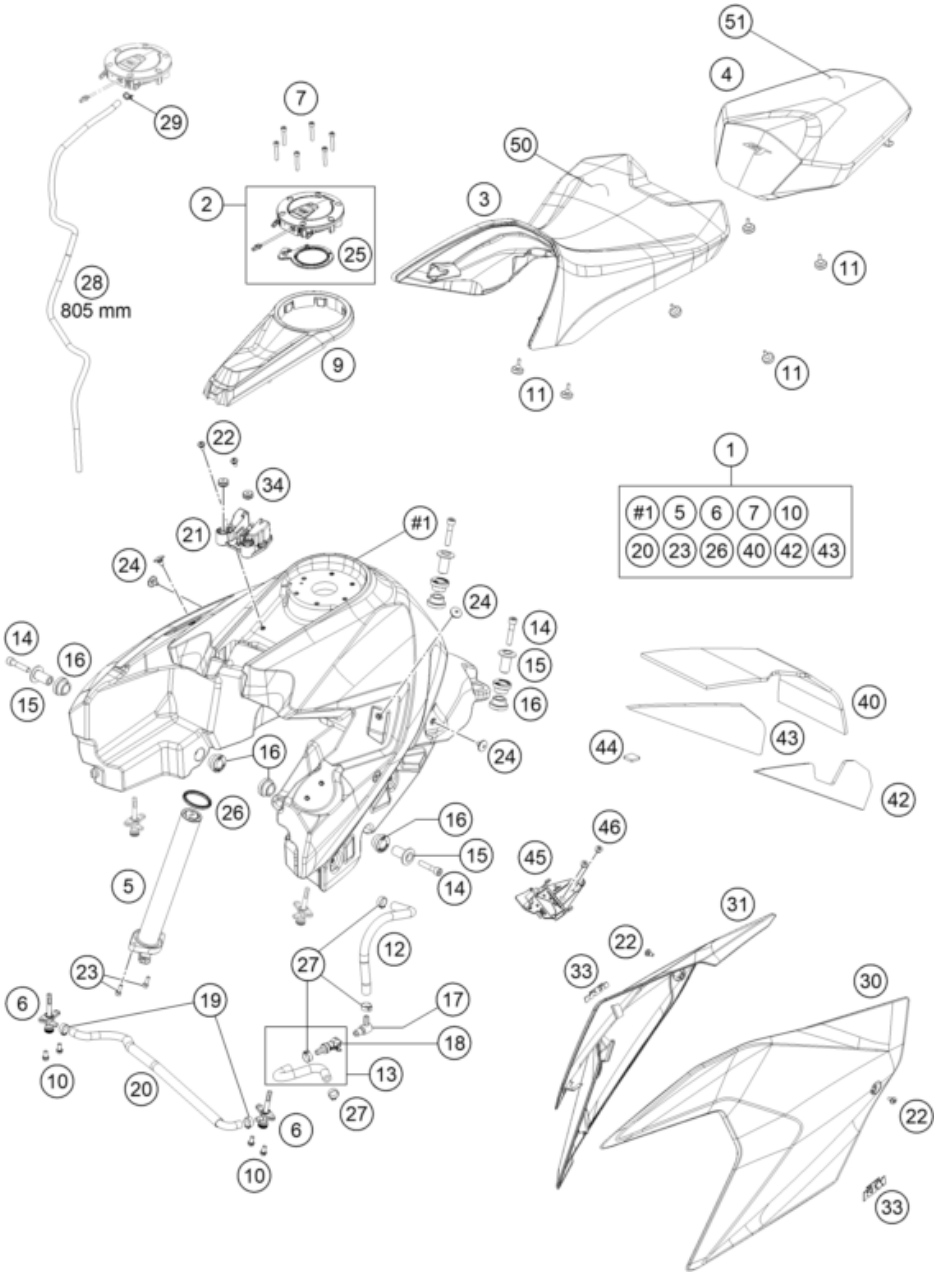

22A6120710

POS	PARTNUMBER		PIECE
46	69008021160	special screw M5x12	2
50	61407040050	SEAT COVER DRIVER	1
51	61407047050	SEAT COVER SOZIUS	1

58064

* NEW PART

X ON DEMAND

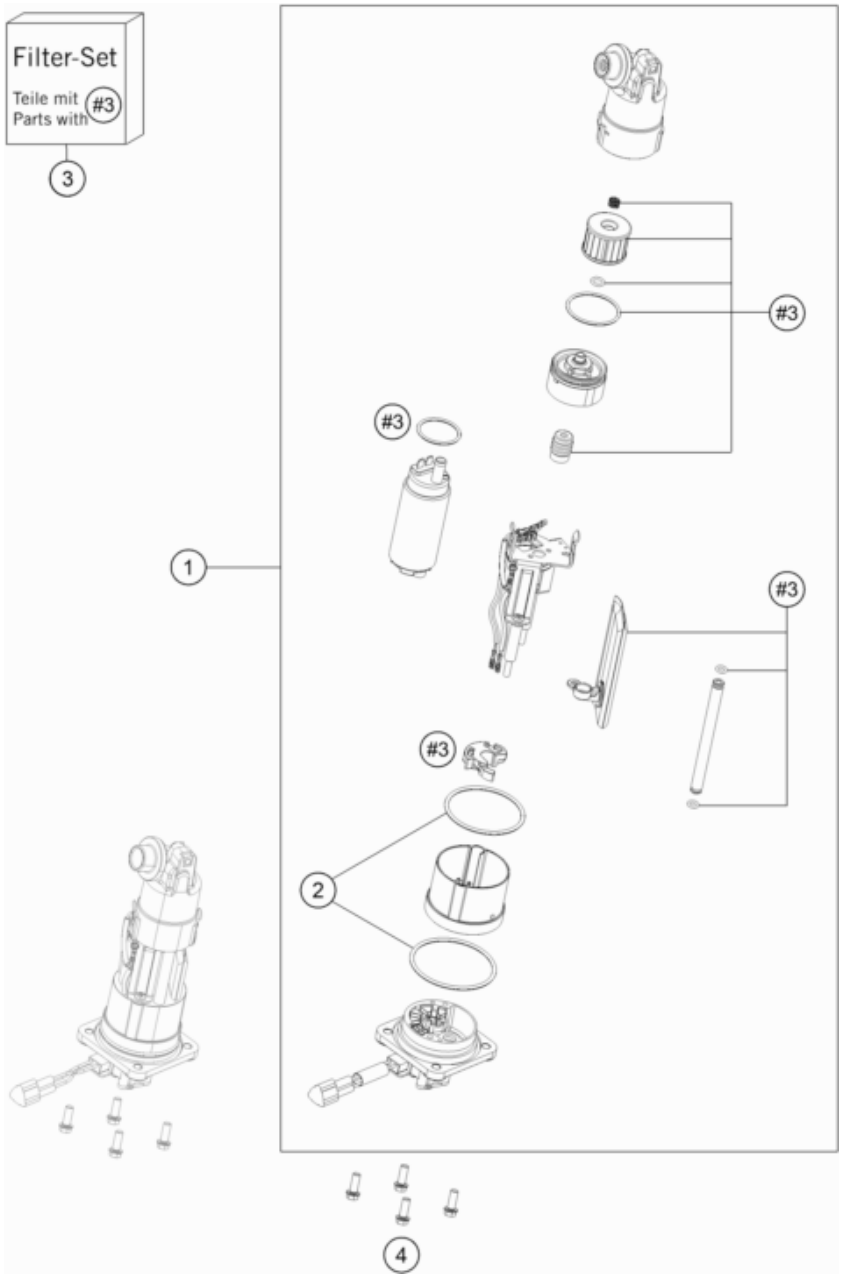

166140730

POS	PARTNUMBER		PIECE
1	60307088000	FUEL PUMP	1
2	61007089000	O-RING SET FOR FUEL PUMP 05	1
3	61007090100	FILTER-SET FUEL PUMP	1
4	0025060166	HH collar screw M6x16 TX30	4

17313

* NEW PART

X ON DEMAND

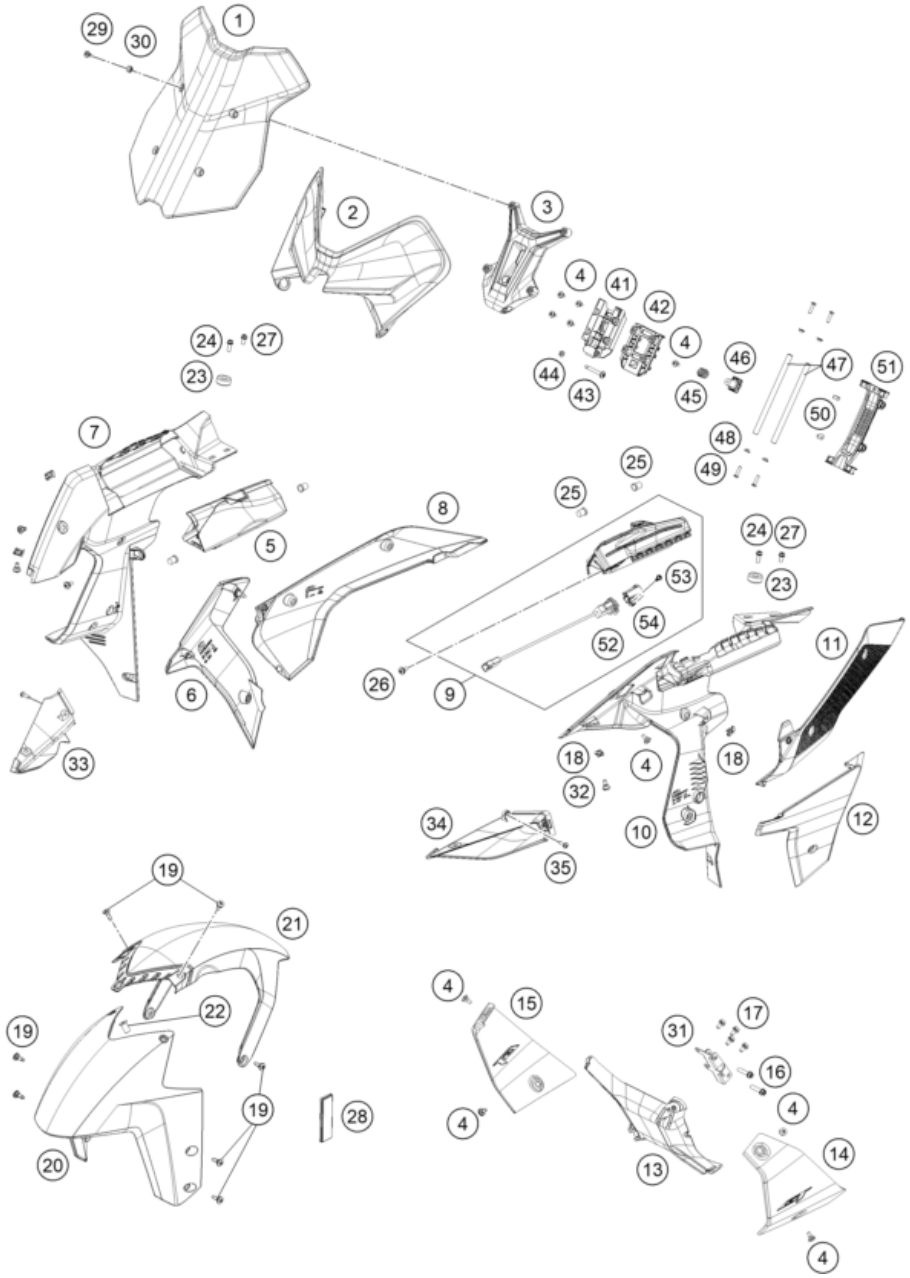

22A6120810

POS	PARTNUMBER		PIECE
1	61508008000	Windshield EU	1
2	61508001000	Headlight mask	1
3	61508008050	Windshield holder	1
4	69008021160	special screw M5x12	13
5	61514078033	Storage compartment, right cmpl.	1
6	61508061000	cooler spoiler right	1
7	61508026000	Inside cover, right	1
8	61408063000	LOWER TANKCOVER RIGHT	1
9	61514080144	Storage compartment, left, cmpl.	1
10	61508027000	Inside cover, left	1
11	61408062000	LOWER TANKCOVER LEFT	1
12	61508060000	Radiator spoiler, left	1
13	61508021000	Front spoiler, bracket	1
14	6150802001033	front spoiler left	1
15	6150802002033	Front spoiler right	1
16	0025060256	HH collar screw M6x25 TX30	2
17	0025050106	HH collar screw M5x10 TX30	4
18	69008021080	clip nut M5	6
19	69008021060	special screw M5x17	10
20	61508010000BK	Front fender	1
21	6130801100033	REAR FENDER BLACK	1
22	60008008050	blind plug nut M5 WN16A	2
23	50307014000	TANK ROLLER 12X26X12 '98	2
24	0025060166	HH collar screw M6x16 TX30	2
25	61508026010	Spring loaded pressure piece D10	4
26	69008021170	Special screw M5x12	1
27	0025060126	HH collar screw M6x12 TX30	2
28	60012080100	SIDE REFLECTOR YELLOW "CEV"	2
29	60708008071	Special screw M5x14	4
30	60708008070	rubber bush windshield fixation	4
31	61508021170	Front spoiler retaining bracket cmpl.	1
32	69007025014	Special screw M5X14 ISA30	2
33	61508002050	Air inlet, left	1
34	61508003050	Air inlet, right	1
35	0081050161	EJOT PT SCREW K50X16 1451	2
41	61508008040	Adapter, windshield bracket	1
42	61508008030	Slide bars, windshield adjust.	1
43	61508008054	Wheel spindle, windshield adjustment	1

58061

* NEW PART

X ON DEMAND

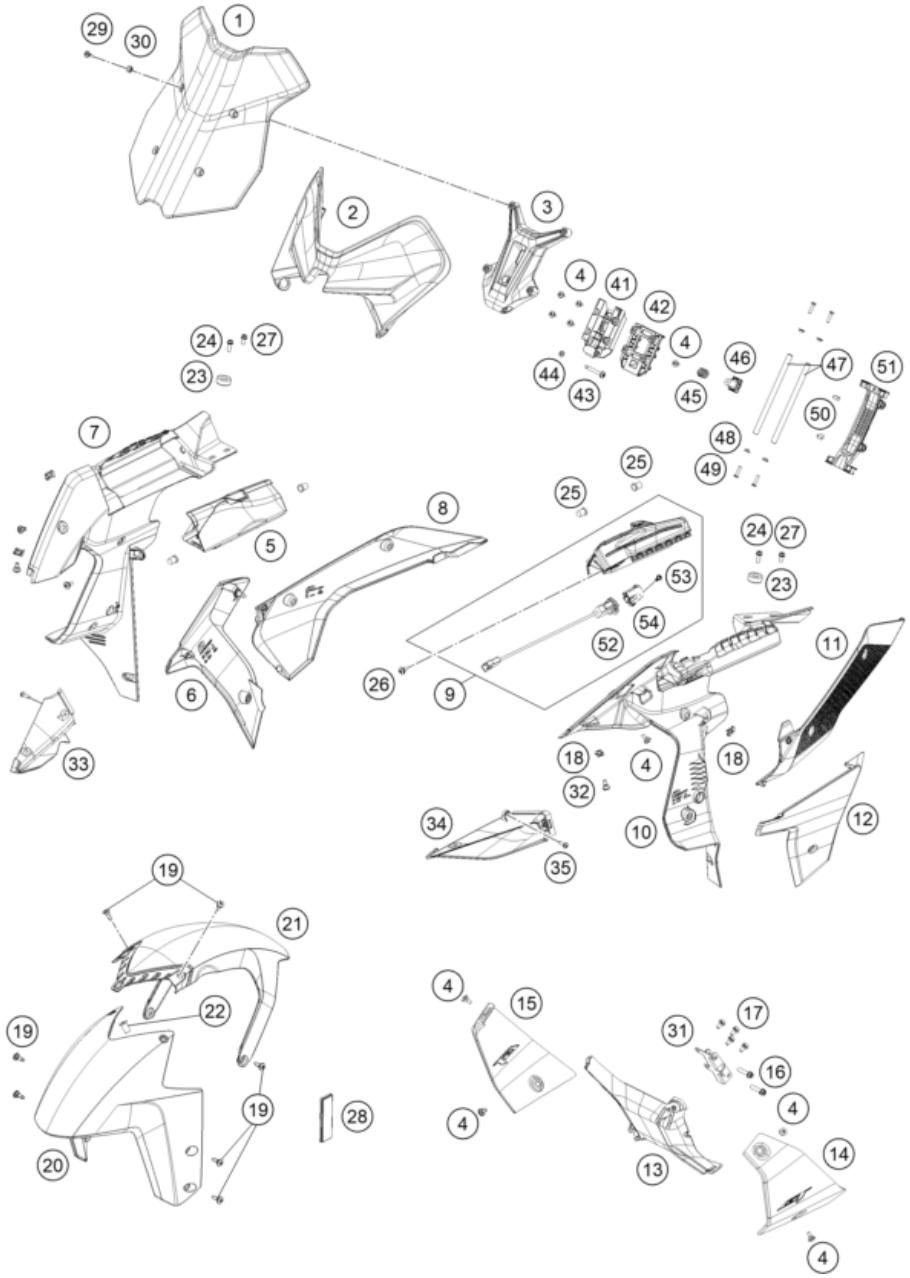

22A6120810

POS	PARTNUMBER		PIECE
44	06923050003	flanged hex nut EN 1661 M5	1
45	61508008062	Spring, windshield adjustment	1
46	61508008060	Locking mechanism, windshield adjust.	1
47	61508008022	Guide profile, windshield adjust.	2
48	61508008023	Bushing windshield fastening	4
49	0738050202	Lens head screw ISO 7380-M5X20A2	4
50	61508008032	Bump rubber	2
51	61508008020	Support, windshield adjustment	1
52	64111043000	USB power socket 12 V	1
53	0081050121	EJOT PT screw K50x12	1
54	A61211043030	Adapter USB socket	1

58061

* NEW PART

X ON DEMAND

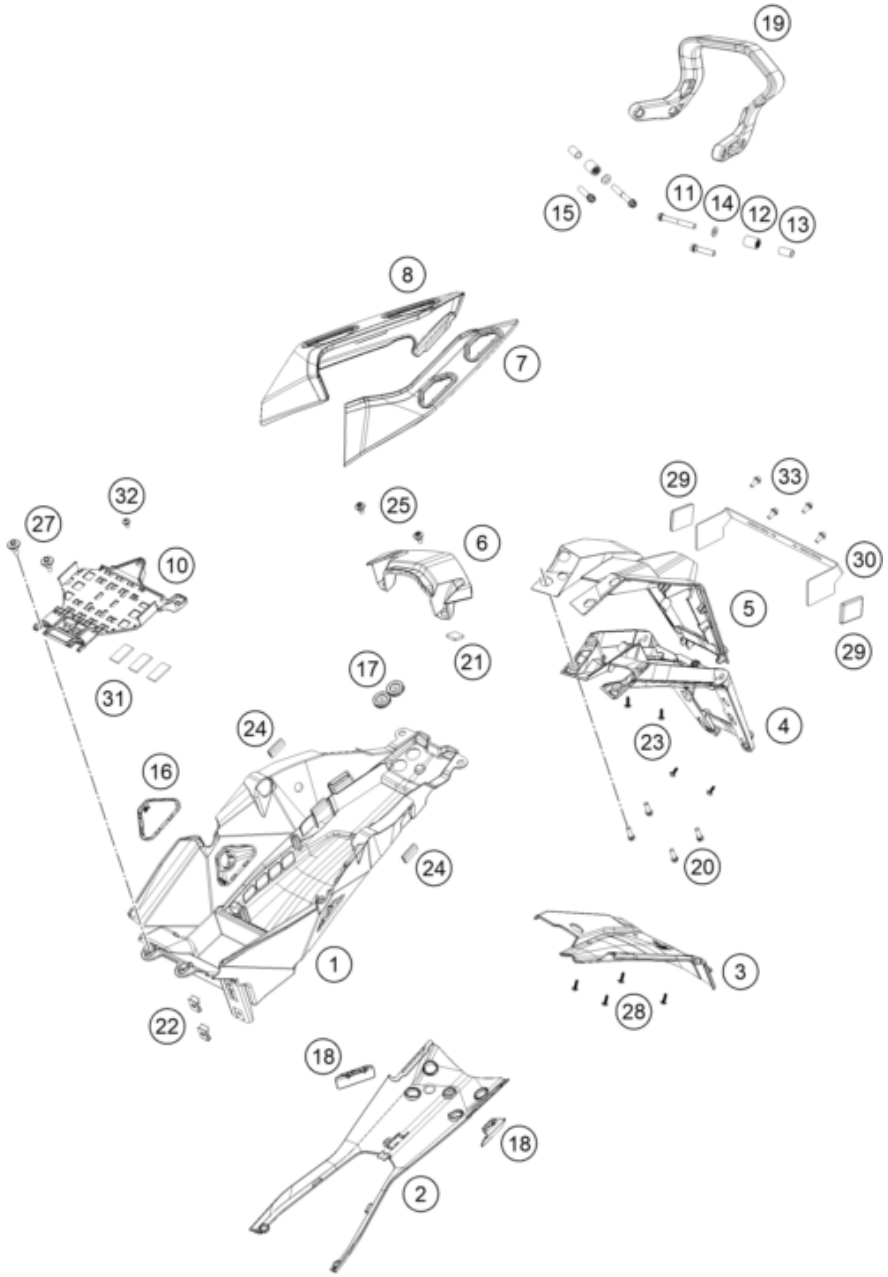

22A6120825

POS	PARTNUMBER		PIECE
1	61408019100	Tail end lower part	1
2	61408019050CB	Bottom rear fairing Pitch black	1
3	61408023010	SPLASH PROTECTOR	1
4	61408023000	NPC LOWER PART	1
5	61408022000	NPC UPPER PART	1
6	61408015020	TAIL LIGHT COVER	1
7	61408042000BKA	Rear fairing left with decal	1
8	61408041000BKA	Rear fairing right with decal	1
10	A61211054000	Battery holder	1
11	0025080606	HH COLLAR SCREW M8x60 TX40	2
12	60307048000	RUBBER SEAT-CONTACT SURFACE	2
13	61407049000	BUSHING 8.4X12X21.5	2
14	0125080003	washer DIN 125 A -8.4	2
15	0025080356	HH collar screw M8x35 TX40	2
16	61408019040	HEATINGSWITCH COVER	1
17	60006001023	RUBBER SLEEVE STOP SCREW	2
18	61403002059	PANNIER HOOK DAMPING RUBBER	2
19	61412008000	PILLION HANDLE BAR	1
20	0025060206	HH collar screw M6x20 TX30	4
21	61408015030	METAMOLL F. TAIL LIGHT COVER	1
22	54603048100	clip nut M6	2
23	0081050121	EJOT PT screw K50x12	4
24	58312085100	EDGE PROTECTOR PER METER	1
25	83008100015	SPECIAL SCREW M6X15X5,5	2
27	60035001000	SPECIAL SCREW M6X21 WS=8	2
28	0081050141	EJOT PT screw K50x14	4
29	16512180100	SIDE REFLECTOR RED REAR only for US	2
30	62512081100	BRACKET SIDE REFLECTOR only for US	1
31	61711055020	Metamoll 139x11.6x3 self-adhesive	3
32	69008021160	special screw M5x12	1
33	0014050123	HH COLLAR SCREW M 5X12 WS=6	4

58060

* NEW PART

X ON DEMAND

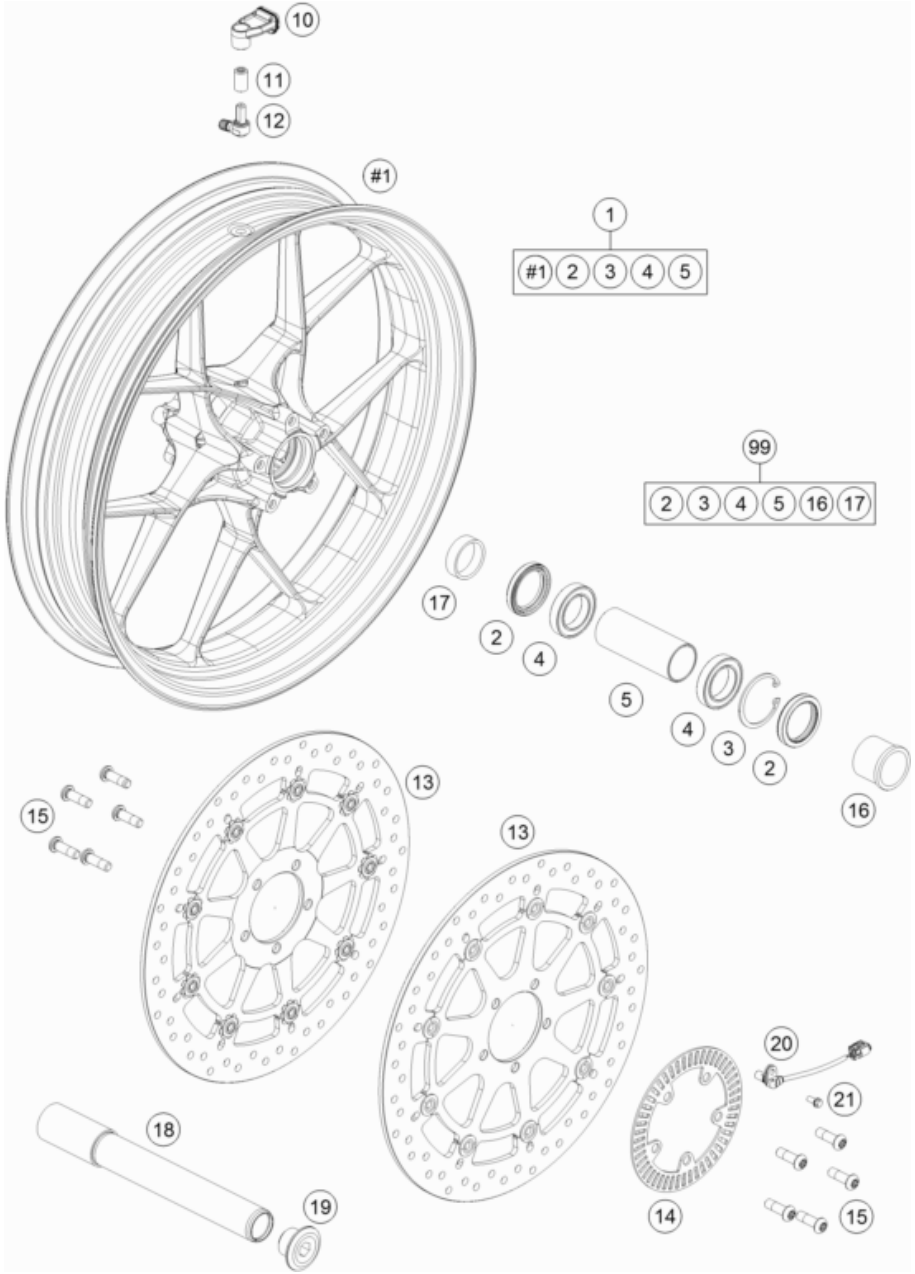

196140910

POS	PARTNUMBER		PIECE
1	61709003033C1	Front wheel 3,5x17" cmpl. black	1
2	0760354771	SHAFT SEAL RING 35X47X7 TC	2
3	0472047175	CIRCLIP DIN0472-47X1,75	1
4	0625069068	GR.BALL BEAR.6906 DDU2CG23S6NM	2
5	61009011000	BEARING SPACER TUBE FRONT 05	1
10	61412033000	TIRE PRESSURE SENSOR SMALL	1
11	61412033050	NUT F. TYRE-PRESSURE SENSOR SM	1
12	61412033060	VALVE 8,5MM 90° F. TPMS SMALL	1
13	6130906000033	BRAKE DISK D=320/5	2
14	76042020000	Sensor wheel front	1
15	76009062000	SPECIAL SCREW M8X25 SS TX40	10
16	61009012000	SPACER BUSH. FR. WHEEL L/S 05	1
17	60009013000	SPACER BUSH. FR. WHEEL R/S 03	1
18	61009081000	WHEEL SPINDEL FRONT 05	1
19	61009082000	AH SCREW M25X1,5 WS=12 05	1
20	76042125000	ABS-SENSOR	1
21	59009062013	SPECIAL SCREW M6X13 WS=8 10.9	1
99	61009015000	FRONT WHEEL REP. KIT	x

58035

* NEW PART

X ON DEMAND

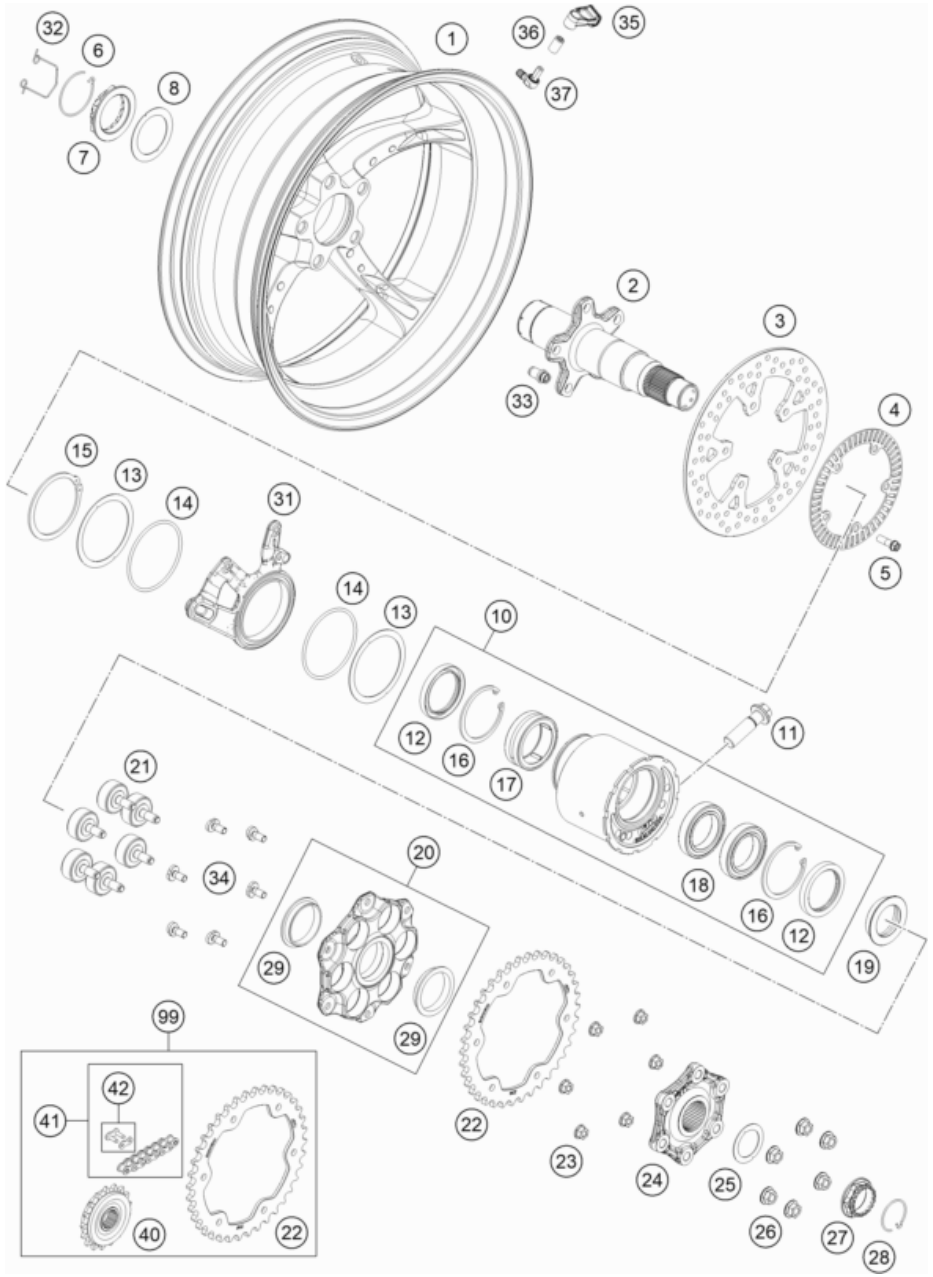

POS	PARTNUMBER		PIECE
1	61710003000C1A	Rear wheel 6x17"	1
2	61310385100	Rear wheel axle	1
3	76010160000	BRAKE DISC 240MM	1
4	76042121000	SENSOR GEAR REAR	1
5	0025080256S	HH COLLAR SCREW M8X25 TX40	5
6	61310187000	SAFETY WIRE R/S	1
7	61310186100	AXLE NUT M50X1.5	1
8	61310016000	WASHER 69X1	1
10	61310010044	CLUTCH HUB HOUSING CPL.	1
11	61310021000	HH COLLAR SCREW M16X1,5X55	1
12	0760526880	SHAFT SEAL RING 52X68X8	2
13	61310019000	WASHER 94X1	2
14	0770840035	O-RING 84,00X3.5 NBR70	2
15	0471078250	CIRCLIP DIN471-78X2.5	1
16	0472068250	CIRCLIP DIN472-68X2.5	2
17	0617456822	NEEDLE BEARING RNA4909-2RSR-XL	1
18	0625061909	DEEP GROOVE BALL BEARING 61909	2
19	61310014000	SPACER RING	1
20	6131005404433S	SPROCKET SUPPORT CPL.	1
21	61310059100	Shock absorber	6
22	61310151038	SPROCKET STEEL DUKE 1290 Z38	1
23	06923080003	hex nut EN 1661 M8 WS13	6
24	6131005000033S	JAR DAMPER CARRIER	1
25	76010116000	SHIM 50X1	1
26	06923100003	HEX. NUT DIN 6923 M10X1.25-10	6
27	61310086000	AXLE NUT M35X1.5	1
28	76010187000	SAFETY WIRE L/S	1
29	76010052000	IGUS BEARING D=50	2
31	6131307500033S	BRAKE CALIPER ADAPTER BLACK	1
32	61310010011	SAFE ARMING WIRE	1
33	61310213000	Centering bolt M8	5
34	61310052100	Rear sprocket screw M8x18 S	6
35	61412033000	TIRE PRESSURE SENSOR SMALL	1
36	61412033050	NUT F. TYRE-PRESSURE SENSOR SM	1
37	61412033060	VALVE 8,5MM 90° F. TPMS SMALL	1
40	60033129017	CHAIN SPROCKET 17-T DAMPED 03	1
41	61310165118	CHAIN DID525 VAZ & MASTER LINK	1

206171010

55506

* NEW PART

X ON DEMAND

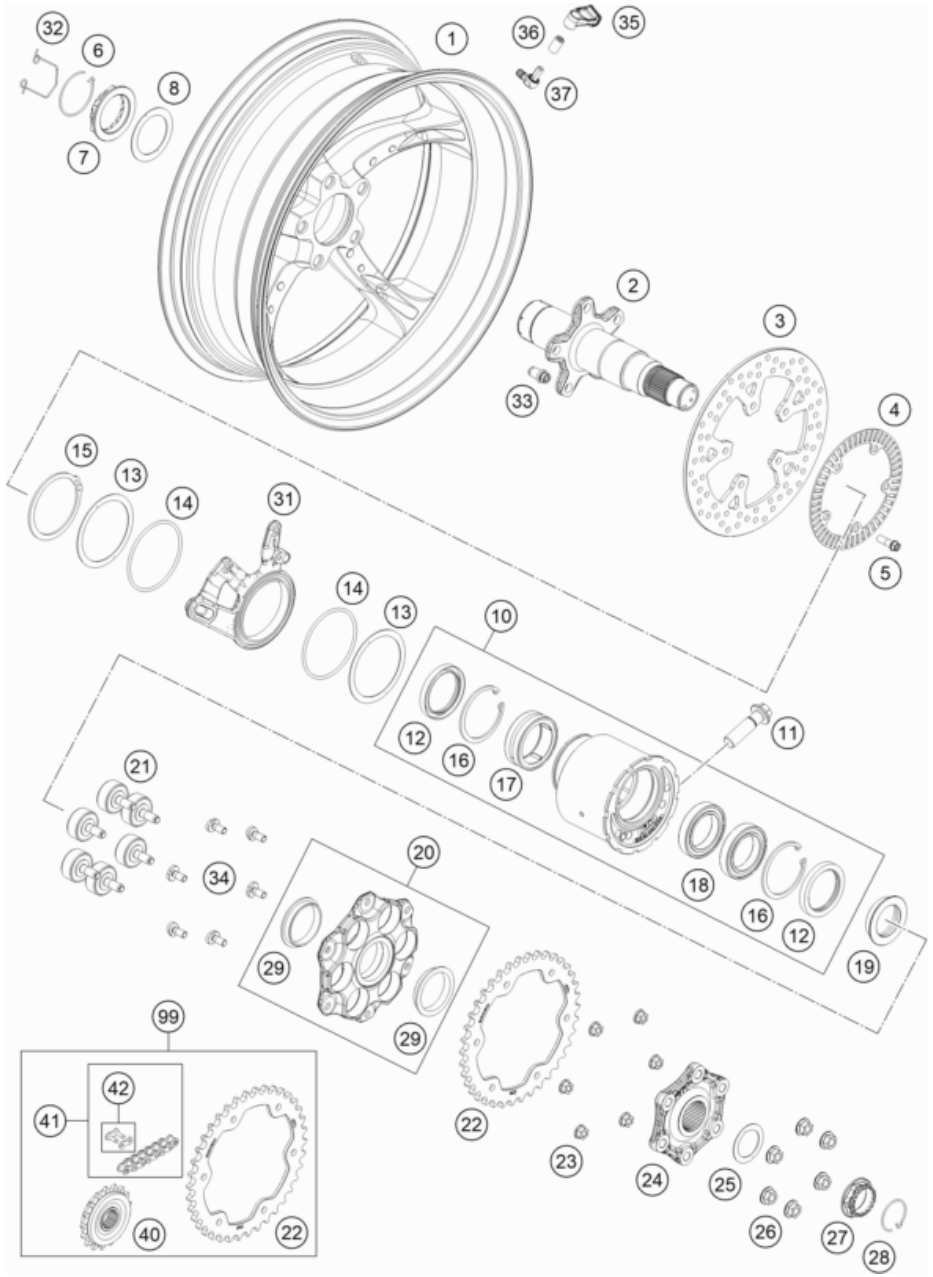

206171010

POS	PARTNUMBER		PIECE
42	61310066000	MASTER LINK FOR CHAIN DID VAZ	1
99	00050002029	DRIVETRAIN KIT 1290 SD 17T/38T	1

55506

* NEW PART

X ON DEMAND

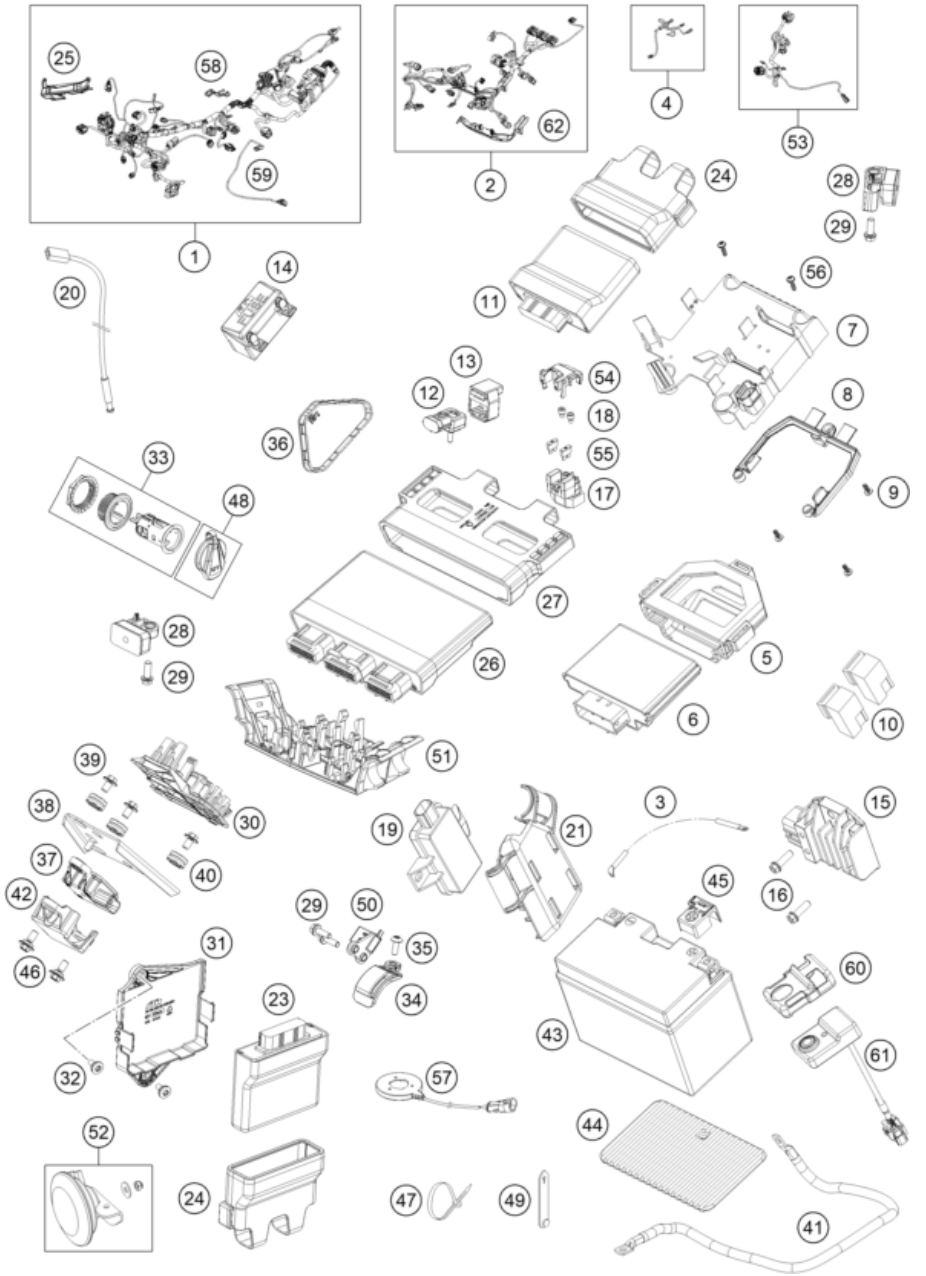

22A6121110

POS	PARTNUMBER		PIECE
1	A61211075033	Main wiring harness cmpl.	1
2	A61211085033	Engine wiring harness cpl.	1
3	61311059050	BATTERY CABLE	1
4	61311076100	REAR WIRING HARNESS	1
5	60711033050	Rubber band	1
6	60711033000	Control unit MCU 3.0	1
7	61508018020	MCU bracket	1
8	61508018010	MCU bracket	1
9	0081050141	EJOT PT screw K50x14	3
10	61111057000	RELAY CM1A-R-12V-H80 07	2
11	60416031000	ELECTRONIC CONTROL UNIT SAFE	1
12	A61241085000	Ambient air pressure sensor	1
13	A61241085050	Ambient air pressure sensor rubber strap	1
14	61311087050	RUBBER CASING FUSE BOX	1
15	60311034000	VOLTAGE REGULATOR	1
16	0025060206	HH collar screw M6x20 TX30	2
17	76211058000	STARTER RELAY 07	1
18	0738060101	COU.SUNK SCR. AH ISO7380 M6X10	2
19	60312032000	RECEIVER AIR PRESSURE SENSOR	1
20	61111018100	TEMPERATURE SENSOR	1
21	61412032040	TPMS holder	1
23	60414039000	CONTROL UNIT CURVE LIGHT	1
24	60316029000	RUBBER EDS-CONTROL UNIT	2
25	60311047000	CABLE CHANNEL R/S	1
26	61941031000	Engine control unit "KTKZ"	1
27	61741031050	Rubber mount ECU	1
28	60416063000	ACCLERATION SENSOR	2
29	0025060166	HH collar screw M6x16 TX30	4
30	61411083000	CONNECTOR BOARD FRONT	1
31	61414039050	LCU HOLDER	1
32	69008021060	special screw M5x17	2
33	60711042000	Power socket 12V	1
34	60416061000	MAGNET HOLDER	1
35	58605083014	SCREW M5X14 TORX 25 07	1
36	61408019040	HEATINGSWITCH COVER	1
37	61542090000	Angle sensor	1
38	61342090040	SUPPORT SLOPING POS. SENSOR	1
39	0024060106	HH COLLAR SCREW M6X10 TX30	3

58040

* NEW PART

X ON DEMAND

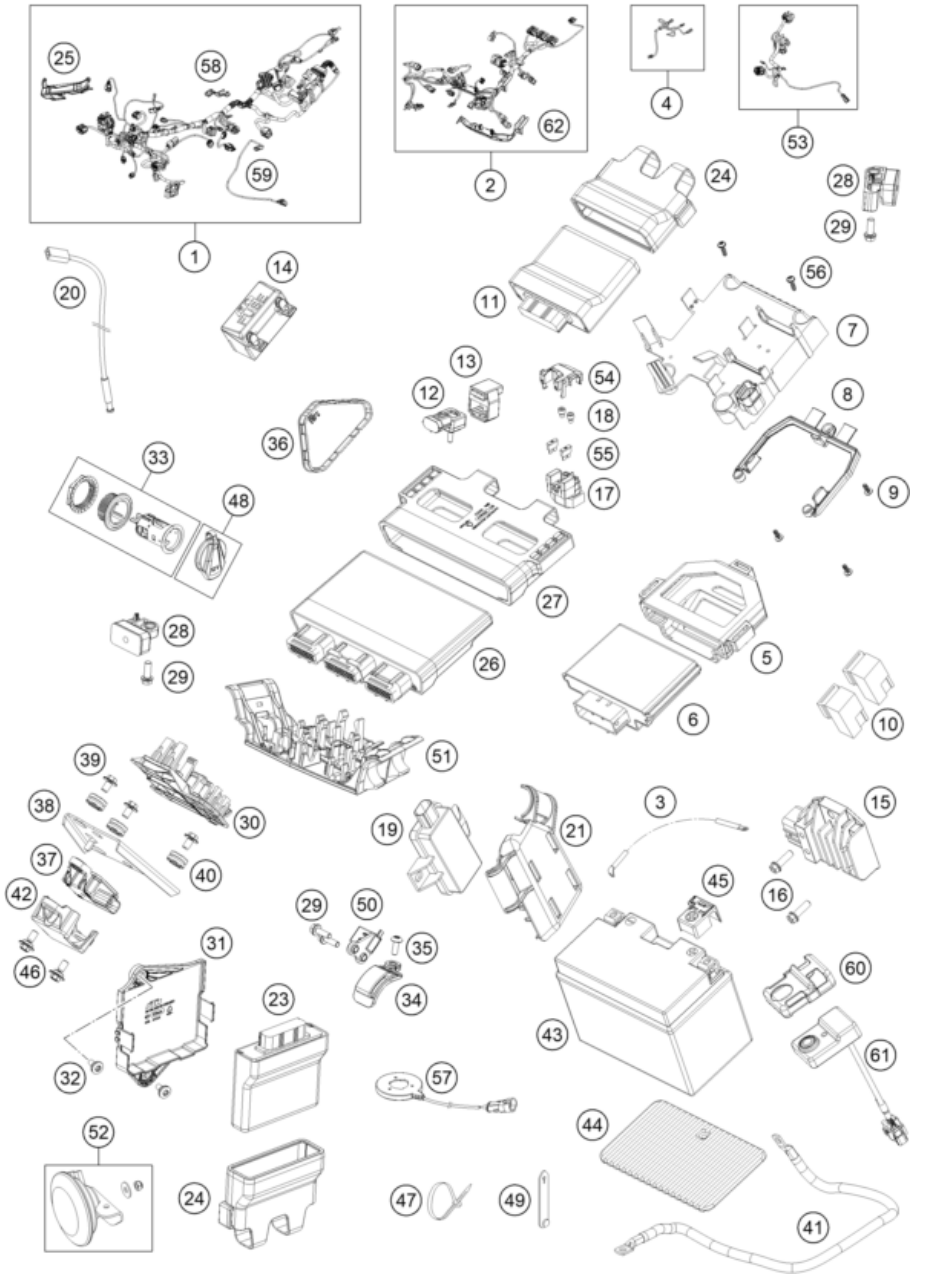

22A6121110

POS	PARTNUMBER		PIECE
40	62142041000	DAMP. COMPONENT ABS MODUL	3
41	A61211098000	Ground wire battery-frame 16mm	1
42	61342090050	COVER SENSOR BOX	1
43	60011053000	BATTERY 12V/11AH 03	1
44	61311053050	RUBBER PLATE FOR BATTERY	1
45	62111059060	COVER POSITIVE POLE	1
46	83008000015	SPECIAL SCREW M6X15X3	2
47	44011076140	CABLE TIE 140/2,5MM BLACK	x
47	44011076200	CABLE TIE 200/3,6MM BLACK	x
47	44011076305	CABLE TIE 300/4,8MM BLACK	x
48	60311042050	Lid 12V-socket	1
49	60011093075	RUBBER CABLE TIE 75MM 03	x
50	60416062000	WHEEL TRAVEL SENSOR	1
51	61411049000	CONNECTOR BOARD REAR	1
52	61611060033	Direct current horn complete	1
53	A61211078000	Front wiring harness	1
54	64111058010	Cover cap starter relay	1
55	58011109130	FUSE 30 A	2
56	0081050181	SCREW FOR PLASTIC K50X18 T20	4
57	69011168000	Antenna keyless	1
58	A61211047000	main wiring harness cable channe	1
59	61511015000	Shock absorber wiring harness, semi-acti	1
60	79114086050	Rubber support, CCU	1
61	79114086100	Connectivity unit	1
62	60311046000	CABLE CHANNEL L/S	1

58040

* NEW PART

X ON DEMAND

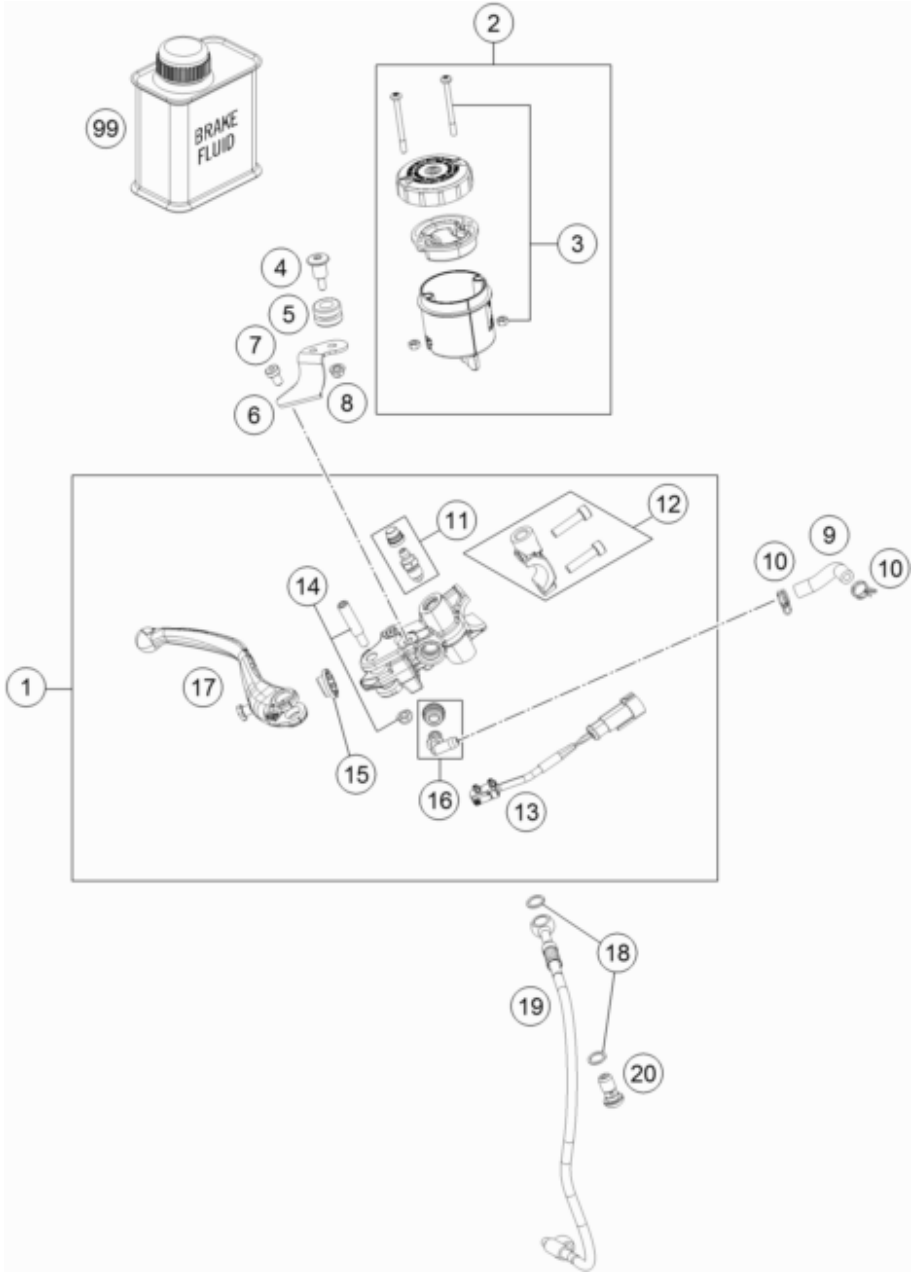

196141310

POS	PARTNUMBER		PIECE
1	6131310100030	Front master cylinder PR16/19	1
2	61313029000	BRAKE FLUID RESERV. BLACK CPL.	1
3	61013009203	SCREW + NUT F. RESERVOIR	1
4	61013013050	SCREW RET.PANEL-RESERVOIR	1
5	61013013000	RUBBER BUSH 05	1
6	61513028000	Retaining brkt., front brake fluid cont.	1
7	61013021000	SCREW RET.PANEL-BRAKE CYLINDER	1
8	61013009004	NUT FOR RESERVOIR	1
9	69013069001	HOSE FOR RESERVOIR 6X1,5	1
10	58007017000	YDNAC CLAMP 10101 (10,4MM)	2
11	60013020000	BLEEDER SCREW WITH CAP	1
12	76013005100	CLAMP CPL. 16	1
13	61311050000	BRAKE LIGHT SWITCH FRONT	1
14	61013006000	LEVER SCREW CPL. 05	1
15	61013008000	RUBBER CUP 05	1
16	54513155000	ANGLE PIECE	1
17	6101300200030	HAND BRAKE LEVER LOOSE BLACK	1
18	0603100141	sealing ring DIN 7603 10x14x1	2
19	61442001000	BRAKE HOSE HANDBREAK CYLINDER,	1
20	62113020100	banjo bolt M10x1x19.5	1
99	00062030000	BRAKE FLUID DOT5.1 0,25L	1

53689

* NEW PART

X ON DEMAND

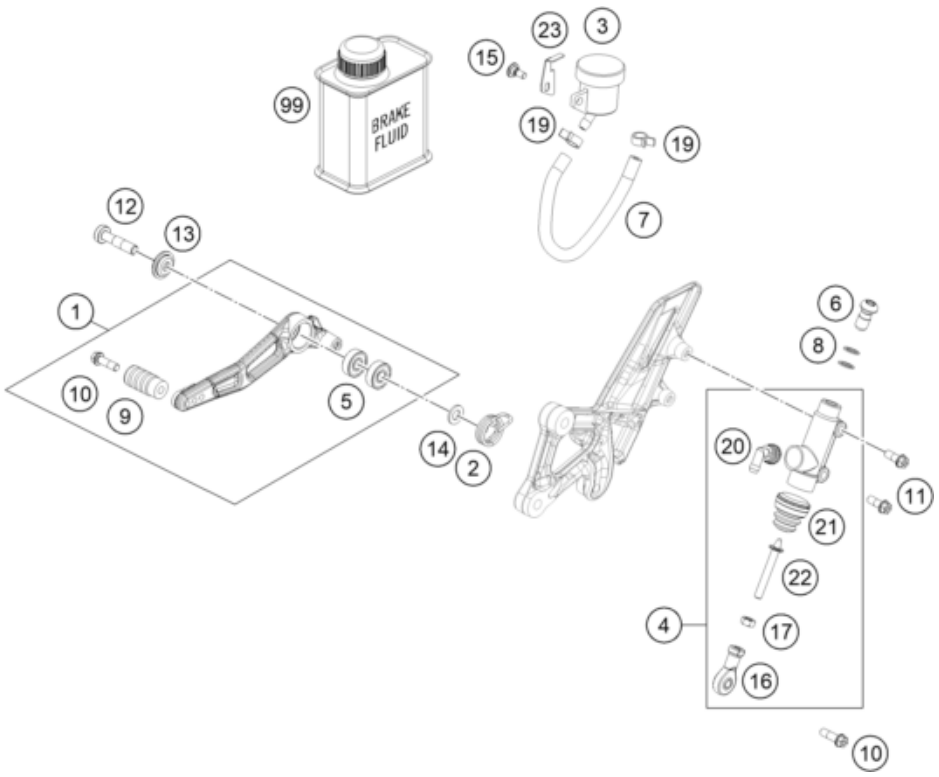

206141330

POS	PARTNUMBER		PIECE
1	6131305004433S	FOOT BRAKE LEVER CPL.	1
2	61313052000	SPRING	1
3	61013069000	reservoir, rear cpl.	1
4	6031306000030	REAR BRAKE CONTROL	1
5	0625006087	GROOVED BALL BEAR. 608 2RS C3	2
6	62113020100	banjo bolt M10x1x19.5	1
7	69013069001	HOSE FOR RESERVOIR 6X1,5	1
8	0603100141	sealing ring DIN 7603 10x14x1	2
9	58303060051	BRAKE LEVER PEDAL DUKE'94	1
10	0025060206S	HH collar screw M6x20 TX30	2
11	0025060166S	HH collar screw M6x16 TX30 SL	2
12	0035080306S	AH-COLLAR SCREW M8X30 ISA45	1
13	61334041000	SPECIAL WASHER D=23X7,2MM	1
14	0125080003	washer DIN 125 A -8.4	1
15	69013099050	SCREW F. EXPANSION TANK	1
16	54603069000	SWIVEL HEAD M6 FOOT BRAKE LEV.	1
17	0934060003	hex nut DIN 934 M6	1
19	58007017000	YDNAC CLAMP 10101 (10,4MM)	2
20	54513155000	ANGLE PIECE	1
21	54513151000	RUBBER SLEEVE	1
22	60313056044	PUSH ROD CPL.	1
23	61713069020	Lock washer, brake fluid reservoir	1
99	00062030000	BRAKE FLUID DOT5.1 0,25L	1

53676

* NEW PART

X ON DEMAND

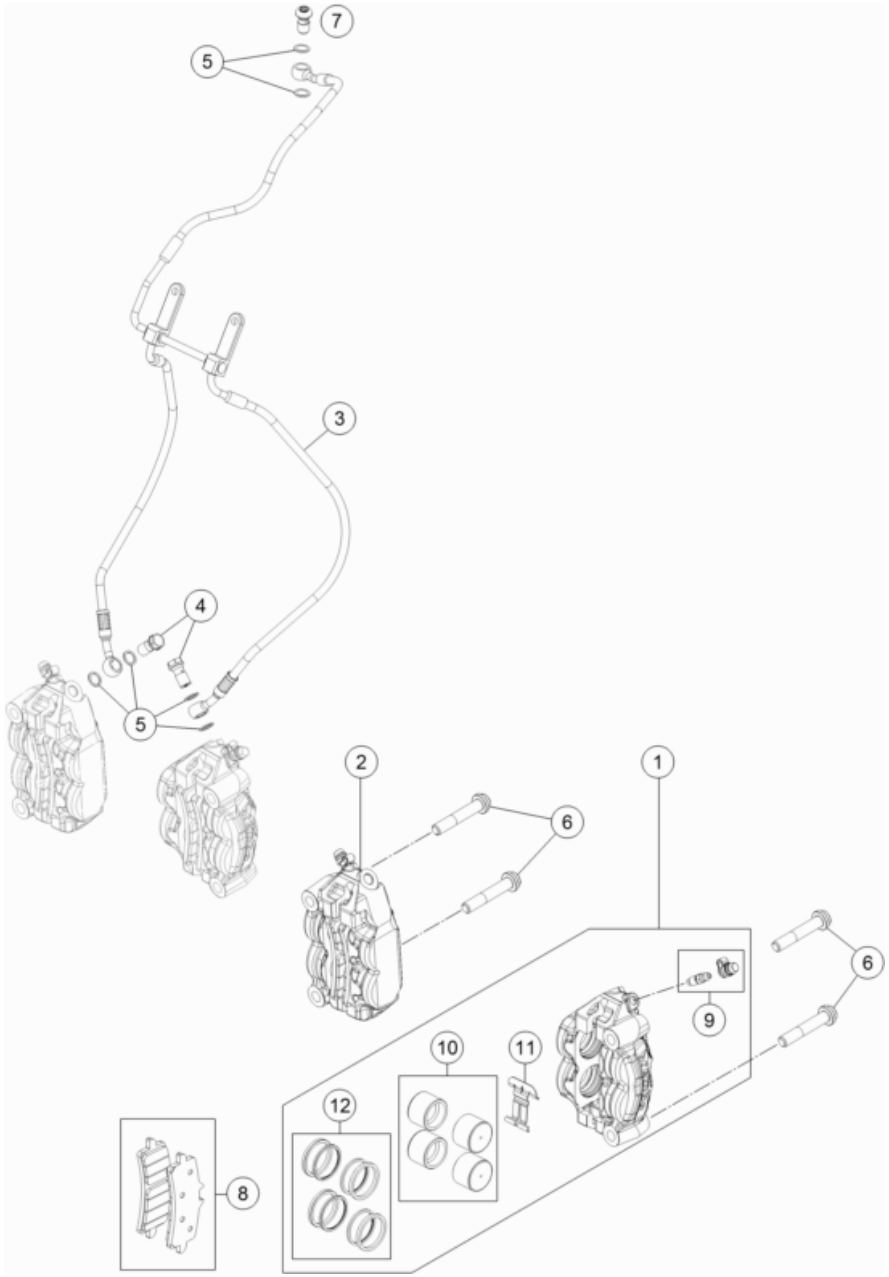

166141360

POS	PARTNUMBER		PIECE
1	6131301500158	BRAKE CALIPER FRONT - W/O PADS	1
2	6131301600158	BRAKE CALIPER FRONT W/O PADS	1
3	61442003000	BRAKE HOSE CALIPERS FRONT	1
4	69013025000	HOLLOW SCREW M10X1X19 SW12	2
5	0603100141	sealing ring DIN 7603 10x14x1	6
6	0035100559S	AH-COLLAR SCREW M10X1,25X55SS	4
7	62113020100	banjo bolt M10x1x19.5	1
8	61313030000	BRAKE PADS SET BRM10A-HH	2
9	61013020100	BLEEDER SCREW WITH CAP	2
10	61313019000	BRAKE PISTON CPL.	2
11	69013018000	SPRING PLATE	2
12	61313021000	SEAL RINGS CPL.	2

17324

* NEW PART

X ON DEMAND

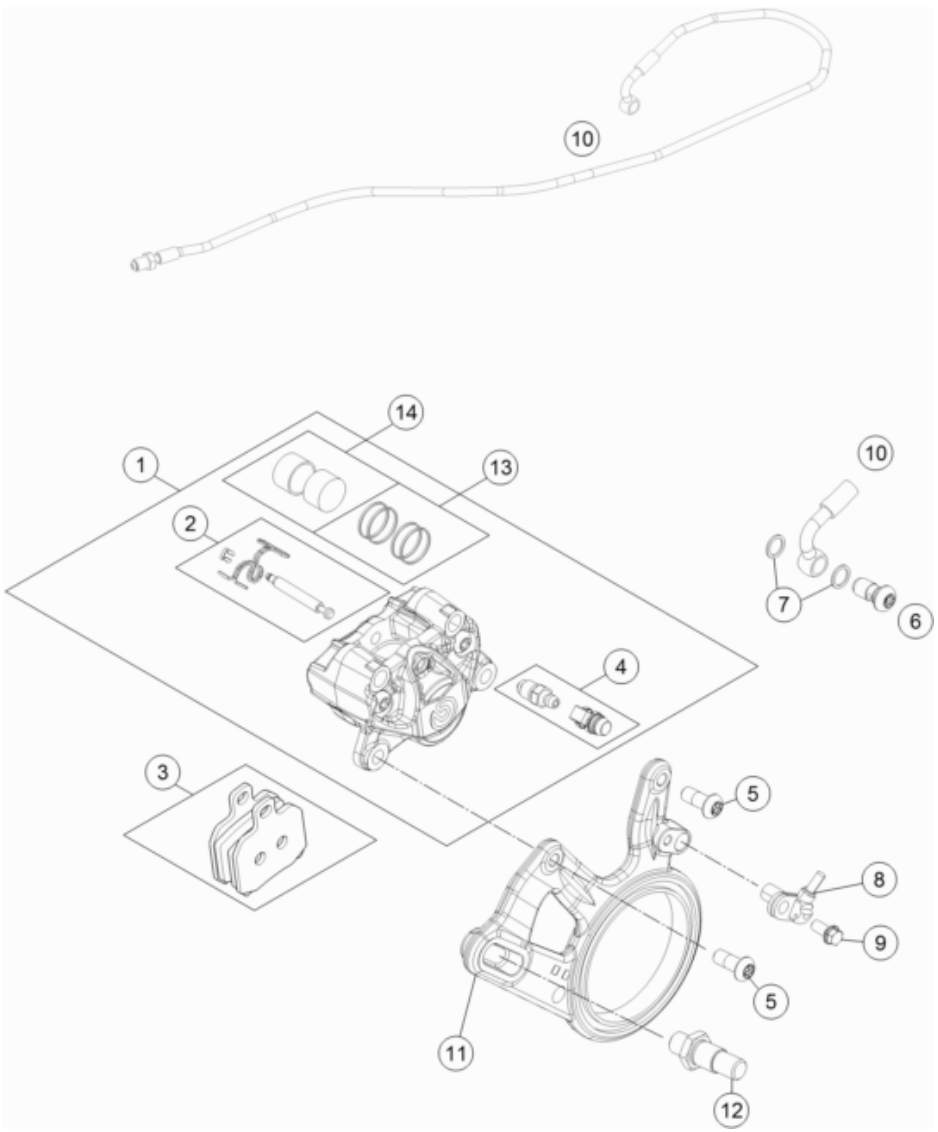

146131390

POS	PARTNUMBER		PIECE
1	6131308000158	BRAKE CALIPER REAR W/O PADS BL	1
2	69013082000	BOLT KIT 08	1
3	61313090100	BRAKE PADS REAR TT2172HH	1
4	69013020000	BLEEDER SCREW WITH CAP	1
5	69013076000	brake caliper screw M8x20	2
6	62113020100	banjo bolt M10x1x19.5	1
7	0603100141	sealing ring DIN 7603 10x14x1	2
8	76042025000	ABS-SENSOR	1
9	59009062013	SPECIAL SCREW M6X13 WS=8 10.9	1
10	61342004020	BRAKE HOSE CON. PIECE / R. CYL	1
11	6131307500033S	BRAKE CALIPER ADAPTER BLACK	1
12	76004142000	BOLT BRAKE SADDLE BRACKET	1
13	69013081000	REPAIR KIT SEAL RING	1
14	61313083000	REPAIR KIT PISTON	1

14626

* NEW PART

X ON DEMAND

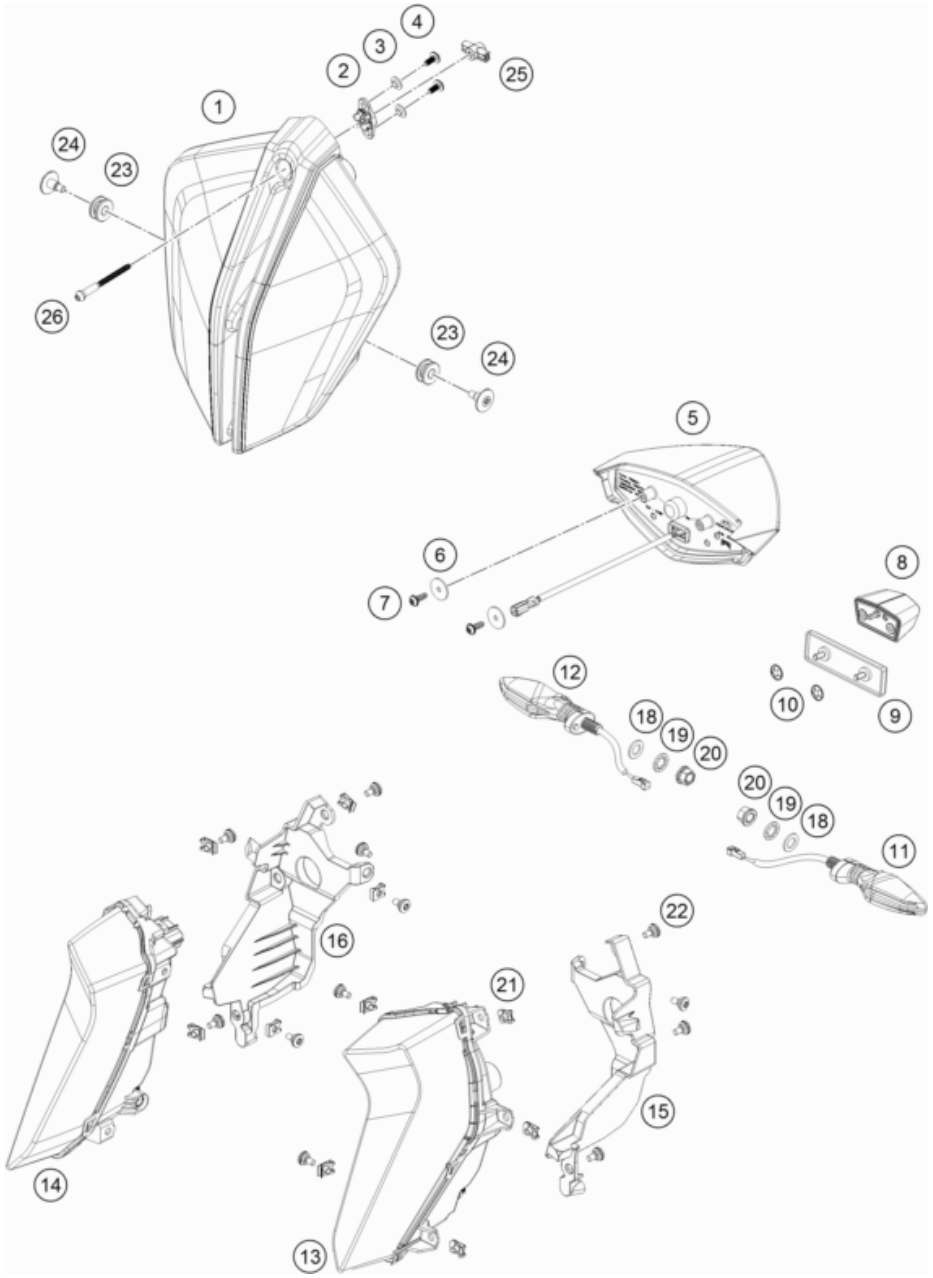

196141410

POS	PARTNUMBER		PIECE
1	61614001000	Headlight LED	1
2	61614020100	Ballhead holder	1
3	61412032010	BUSH 13X7X3,3	2
4	61614018100	EJOT ALTRACS 50X12	2
5	61314140300	Rear light Superduke SAE	1
6	0522040003	WASHER DIN522 A2K 4.3X20X1.25	2
7	0081050141	EJOT PT screw K50x14	2
8	60314047000	license plate lighting	1
9	58412080400	Rear reflector red	1
10	60408061060	LOCK WASHER D5	2
11	60314025000	turn signal front left/rear right	1
12	60314026000	turn signal front right/rear left	1
13	61414007100	Cornering light left	1
14	61414008100	Cornering light right	1
15	61514007010	Bracket, cornering light left	1
16	61514008010	Bracket, cornering light right	1
18	0433100003	WASHER 18x10,5x1,6	2
19	0797100003	LOCK WASHER DIN6797-J10,5 ZI	2
20	58414030000	HH COLLAR NUT M10X1,25 WS=13	2
21	69008021080	clip nut M5	10
22	69008021160	special screw M5x12	12
23	61614013050	Rubber bushing	2
24	61514021000	Special screw M6x18	2
25	61514019000	Ball-head screw shaft	1
26	61514020010	Ball-head screw	1

53690

* NEW PART

X ON DEMAND

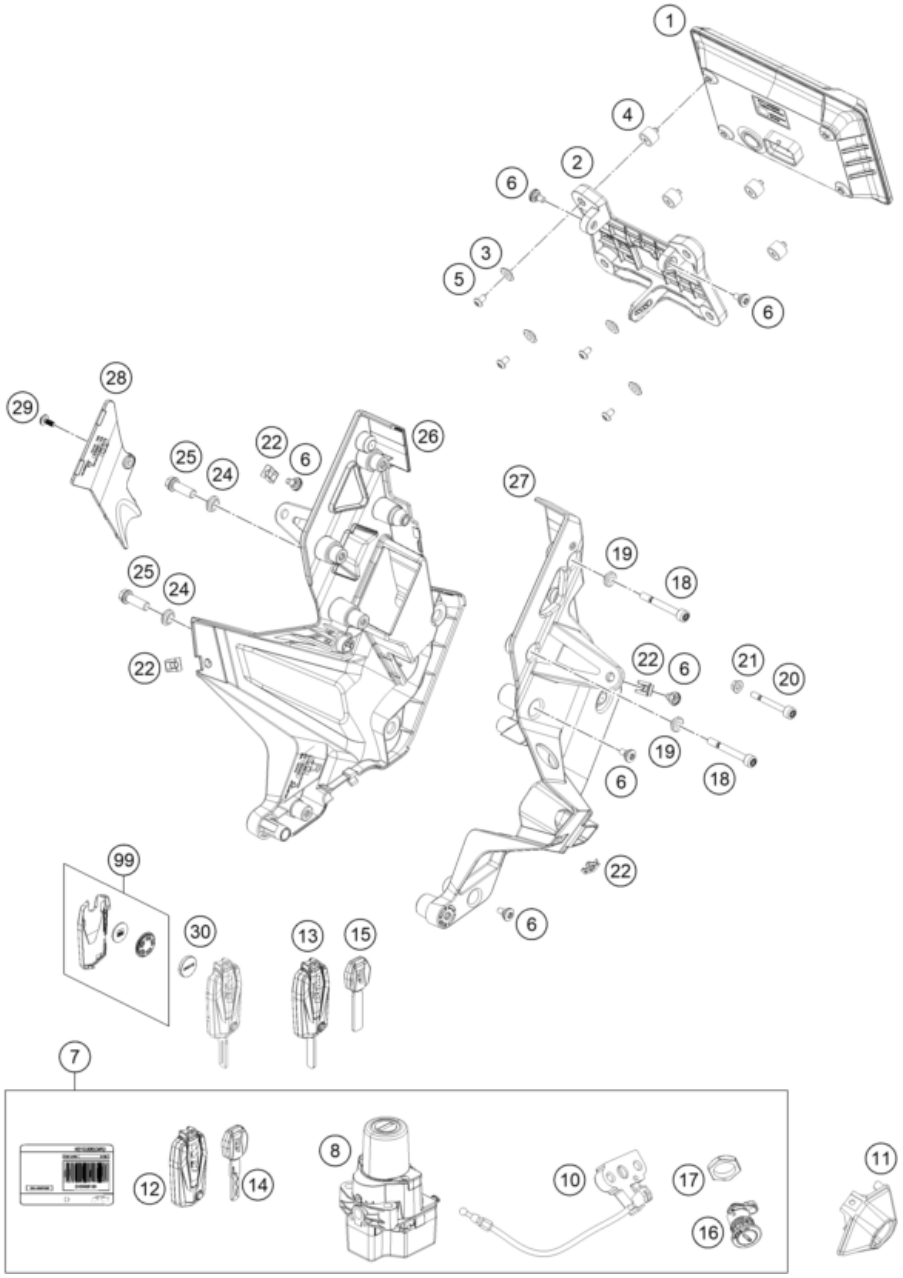

22A6121430

POS	PARTNUMBER		PIECE
1	61914069000	Combination instrument	1
2	61514062000	Instrument support	1
3	61614069020	Tachometer support bush	4
4	61514069110	Damper, speedometer	4
5	0738050082	Flat Head Screw ISO7380 M5x8 A2 TX25	4
6	69008021160	special screw M5x12	6
7	61611266044	Lockset Race-on 433MHz	1
8	61611266000	Ignition lock Race-on 433MHz	1
10	61307050000	SEAT LOCK MECHANISM CPL.	1
11	61407055000	PILLIONSEATLOCKHOLDER	1
12	60711267000	Race-on key 433 MHz	1
13	60711267010	Race on blank key 433MHz	x
14	60411067000	KTM ignition key	1
15	60411067010	Blank KTM ignition key	x
16	61307050020	LOCK CYLINDER SEAT LOCK	1
17	69007050050	NUT SEAT LOCK M22X1,5	1
18	0900000605000	AH-collar screw M6x50 ISA30	2
19	61514010010	Collar bushing 6.3x9x14x4.5	2
20	0900000504500	AH-collar screw M5x45 ISA30	1
21	06923050003	flanged hex nut EN 1661 M5	1
22	69008021080	clip nut M5	4
24	61414011040	BUSHING 8.2/11/4.75	2
25	0025080256	HH collar screw M8x25	2
26	61514011100	Mask support right	1
27	61514010100	Mask support left	1
28	61514011010	Cable cover, mask support	1
29	0081045121	SCREW FOR PLASTIC K45X12 T20	1
30	58512085160	BATTERY FOR ICO TRIPMASTER 04	x
99	60711067050	Cover-Kit for Race-on-Key	x

58059

* NEW PART

X ON DEMAND

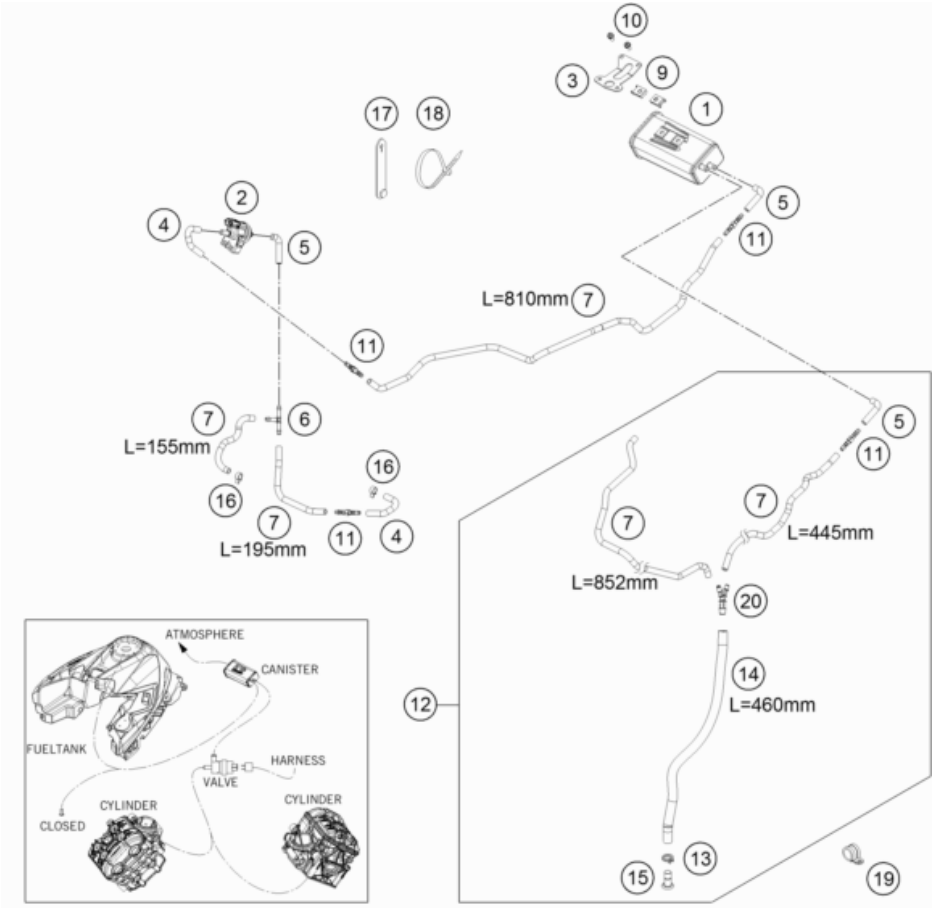

196141510

POS	PARTNUMBER		PIECE
1	75015001200	CARBON CANISTER	1
2	76015015000	EVAP valve	1
3	61415002000	BRACKET FOR CARBON CANISTER	1
4	61415021000	HOSE PURGE VALVE	2
5	61315022000	PREFORMED HOSE 6X10 FPM	3
6	60015022000	T-CONNECTOR TS-6 03	1
7	78015019000	HOSE EPA D=6/10 L=2000MM	x
9	54603048100	clip nut M6	2
10	0025060126	HH collar screw M6x12 TX30	2
11	69015019010	HOSE CONNECTION STRAIGHT	4
12	61415025033	TANK VENT. TUBE - AKF	1
13	58431082100	YDNAC-CLAMP 10173 (16MM) '98	1
14	78015119000	HOSE EPA D=10/16 L=2000MM	x
15	61315026000	PLUG D=10	1
16	59007017000	CLAMP YDNAC 10096F (9,6MM)	2
17	60011093075	RUBBER CABLE TIE 75MM 03	x
17	60011093060	RUBBER CABLE TIE 60MM 03	x
18	44011076140	CABLE TIE 140/2,5MM BLACK	x
19	61315027000	CABLE CLAMP D=16	1
20	61315028100	Y-CONNECTOR YS 6-10-6	1

53692

* NEW PART

X ON DEMAND

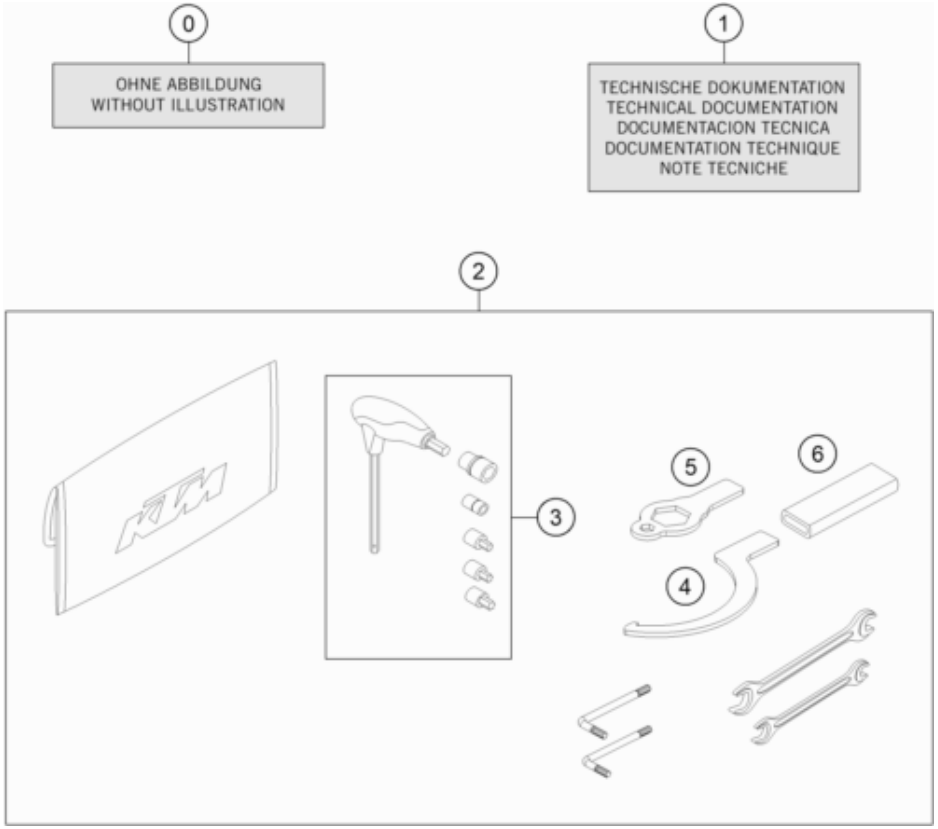

206172000

POS	PARTNUMBER		PIECE
0	61508021000	Front spoiler, bracket	1
0	00063001022	Foam cutout spoiler protection SD-GT	1
0	0025060256	HH collar screw M6x25 TX30	2
0	6150802001033	front spoiler left	1
0	6150802002033	Front spoiler right	1
0	69008021160	special screw M5x12	4
0	61508008000	Windshield EU	1
0	61408023010	SPLASH PROTECTOR	1
0	0081050141	EJOT PT screw K50x14	4
0	61312040300	Mirror left	1
0	61312041300	Mirror right	1
0	60011093075	RUBBER CABLE TIE 75MM 03	2
0	00063004202	PRINT LABEL 60X51 MM	1
0	60708008070	rubber bush windshield fixation	4
0	60708008071	Special screw M5x14	4
0	61308192000	STICKER SET FORK WP SMALL	1
0	00063004012	HEADLIGHT MASK BOX	1
0	62002080053	CLAMP INTERNAL	2
0	0912080451	Screw w.hex.socket M8x45-8.8 black	2
0	61502083000C1	Handguard bracket right	1
0	61502082000C1	Handguard bracket left	1
0	61502080000CB	Handguard left	1
0	61502081000CB	Handguard right	1
0	0025050106	HH collar screw M5x10 TX30	4
0	61508021170	Front spoiler retaining bracket cmpl.	1
0	00063004105	950 ADV. CARTON F WIND PROT.	1
0	00063099014	GRIFFSCHUTZ NOMAPACK 28/13	2
0	K5360002	foil	3
1	3214550EN	Owner Manual 1290 Super Duke GT 2022	1
2	61729199000	On-board tool kit	1
3	60029070100	T-WRENCH WS=6/8/10/17	1
4	61329085000	HOOK WRENCH ECCENTRIC REAR WH.	1
5	61729079000	Ring wrench, double, on-board tool kit	1
6	60012060000	GRIP FOR RING WRENCH	1

58068

* NEW PART

X ON DEMAND

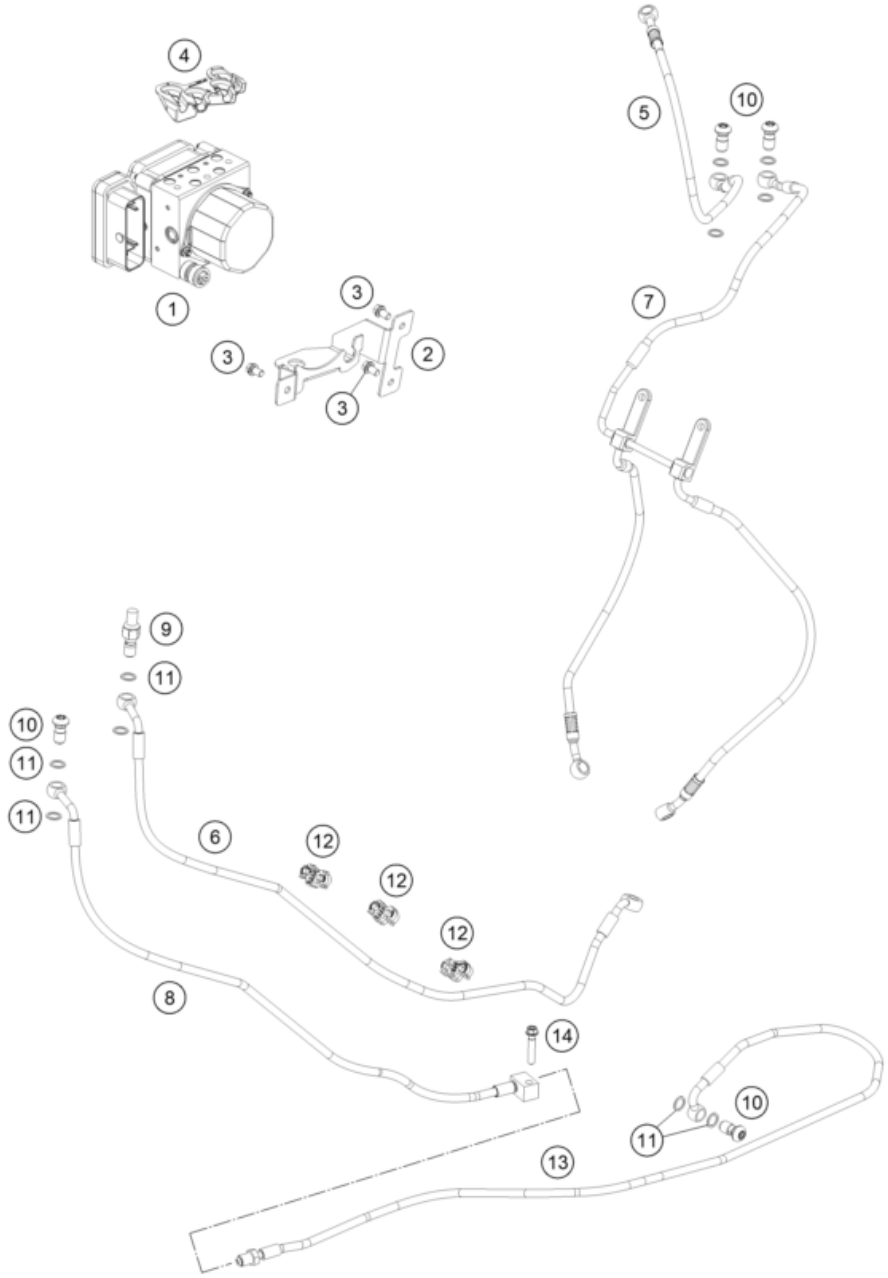

22A6124210

POS	PARTNUMBER		PIECE
1	A61242031044	ABS module filled	1
2	61442040000	SUPPORT ABS-MODULE	1
3	0025060106	HH collar screw M6x10 TX30	3
4	61442050000	BRAKE PIPE LOCKING	1
5	61442001000	BRAKE HOSE HANDBREAK CYLINDER,	1
6	61442002000	BRAKE HOSE FOOTBRAKECYLINDER	1
7	61442003000	BRAKE HOSE CALIPERS FRONT	1
8	61442004010	BRAKE HOSE	1
9	60311051000	BRAKE LIGHT SWITCH REAR	1
10	62113020100	banjo bolt M10x1x19.5	4
11	0603100141	sealing ring DIN 7603 10x14x1	7
12	61342046000	SUPPORT ABS-PIPE D7,5	4
13	61342004020	BRAKE HOSE CON. PIECE / R. CYL	1
14	0025060306S	HH collar screw M6x30 TX30	1

58063

* NEW PART

X ON DEMAND

22A6128011

POS	PARTNUMBER		PIECE
1	50203098003	Sticker "WARNING LABEL 3"	1
2	50307098000	STICKER ''OWNERS MANUAL''	1
3	61503098000	Sticker technical information	1
4	LI22-A612-2	Type label, EU KTM	1
5	61303099000	AUFKLEBER KETTENSPANNUNG	1
6	A61203095200	Sticker ECE	1
7	21007098000	Sticker fuel labelling	1
8	21003094000	"Sticker ""EAC"""	1

57816

* NEW PART

X ON DEMAND

KTM.COM

F9903WFEN

Art. Nr.: F9903WFEN 3. Okt 2022

KTM Sportmotorcycle GmbH
5230 Mattighofen, Austria
www.ktm.com

KTM_POWERPARTS KTM_POWERWEAR KTM_ORIGINAL SPARE PARTS